This document is the property of Amphenol Corporation and is delivered on the express condition that it is not to be disclosed, reproduced in whole or in part, or manufactured or sold, by anyone other than Amphenol Corporation without its prior consent, & that no right is granted to disclose or to use any information in this document.

CONTROLLED DOCUMENT
11 SEP 2002

REVISIONS				
SYM	ECN	DESCRIPTION	DATE	APPROVED
A	HK2332	FIRST RELEASE TO REPLACE SOME CUSTOMER DRAWING.	09/11/02	IP

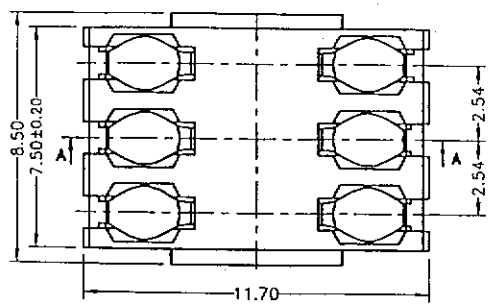

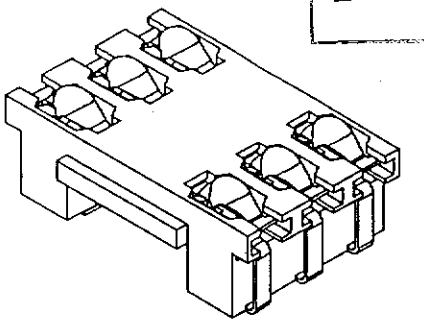

PART NUMBER SYSTEM:

CAD-0601-XX2

P/N	DIM A	DIM B
CAD-0601-402	$4.08^{+0.02}_{-0.06}$	$0.75^{+0.15}_{-0.06}$
CAD-0601-382	3.80±0.10	0.75±0.15
CAD-0601-362	3.60±0.10	0.75±0.15
CAD-0601-342	3.40±0.10	0.75±0.15
CAD-0601-322	3.20±0.10	0.75±0.15
CAD-0601-302	3.00±0.10	0.75±0.15
CAD-0601-282	2.80±0.10	0.75±0.15
CAD-0601-262	2.60±0.10	0.75±0.15
CAD-0601-242	2.40±0.10	0.75±0.15
CAD-0601-222	2.20±0.10	0.75±0.15

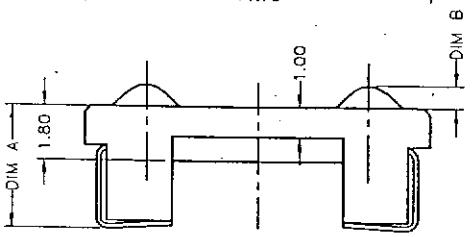

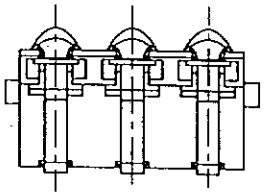

AMPHENOL EAST ASIA LIMITED
ENGINEERING DEPARTMENT
DOCUMENT CONTROL
11 SEP 2002
RECEIVED

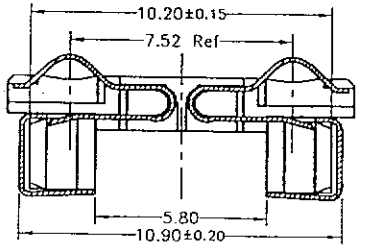

SECTION A-A

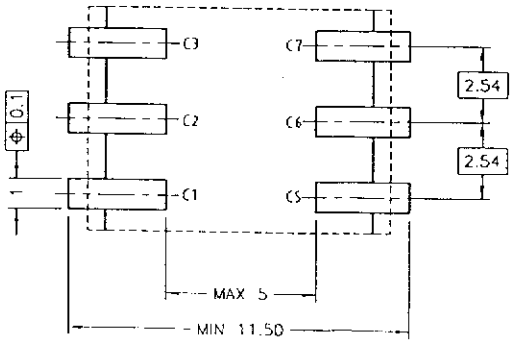

RECOMMENDED PCB MOUNTING PATTERN

Notes :

1. Contacts chip cards according to ISO7816 and Plug In SIM-Cards.
2. Material :
   Housing : 30% GLASS-FILLED THERMOPLASTIC LCP BLACK UL94V-0
   Pin : Phosphor Bronze CS191R-H.
   Plating: Card side plating 0.38 μm gold
   Tin/Lead 2.54~5.08 μm THICK
   Under layer 1.3 μm Ni.
3. PACKING: TAPE&REEL
4. SEE PART NUMBER SYSTEM FOR ORDER P/N.

CUSTOMER DRAWING

UNLESS OTHERWISE SPECIFIED TOLERANCES

	U.S.	METRIC
.X +/-	/	0.20
.XX +/-	/	0.10
.XXX +/-	/	
FRACTIONS +/-	/	
ANGLES +/-	/	3°

FOR MATERIALS AND FINISHES SEE NOTES

REMOVE SHARP EDGES

DIMENSIONS

U.S. INCHES

(METRIC) (MM)

APPROVAL	DATE
DRAWN	9/11/02
CHECKED	
CHECKED	9/11/02

DRAWING FILE: E:\MASTER\DRAWING\CAD\CCAD0601XX2

ANGLE OF PROJECTION

Amphenol

Amphenol East Asia Limited Manufacturing Operation

TITLE 6PIN Smart Card Connector, without switch.

SIZE A3 DRAWING NO CCAD-0601-XX2 REV. A

SCALE NONE SHEET 1 OF 1