NOTES:

1. MATERIALS AND FINISHES:
   - HOUSING - BRASS, GOLD PLATING
   - BODIES - BRASS, NICKEL PLATING
   - CONTACTS - BERYLLIUM COPPER, GOLD PLATING
   - INSULATORS - PTFE, NATURAL
   - SPANNER NUTS - BRASS, NICKEL PLATING
2. ELECTRICAL:
   - A. IMPEDANCE: 75 OHM
   - B. FREQUENCY RANGE: DC-18 GHz
   - C. RETURN LOSS: 20 dB, MAX @ DC-6 GHz
     15 dB, MAX @ 6-12 GHz
   - D. DIELECTRIC WITHSTANDING VOLTAGE: 1000 VRMS, MIN.
3. MECHANICAL:
   - A. DURABILITY: 500 CYCLES MIN.
   - B. TEMPERATURE RANGE: -65° C TO 165° C
4. PACKAGING:
   - A. QUANTITY: SINGLE PACK
   - B. MARKING: PACKAGING TO BE MARKED "AMPHENOL RF, 34-1131-12G, AND DATE CODE"
5. RECOMMENDED SPANNER NUT TORQUE: 5-7 IN-LBS

THIRD ANGLE PROJ.

REVISIONS				
REV	DESCRIPTION	DATE	ECN	APPR
A	RELEASE TO MFG.	30-MAR-20	14801	EH

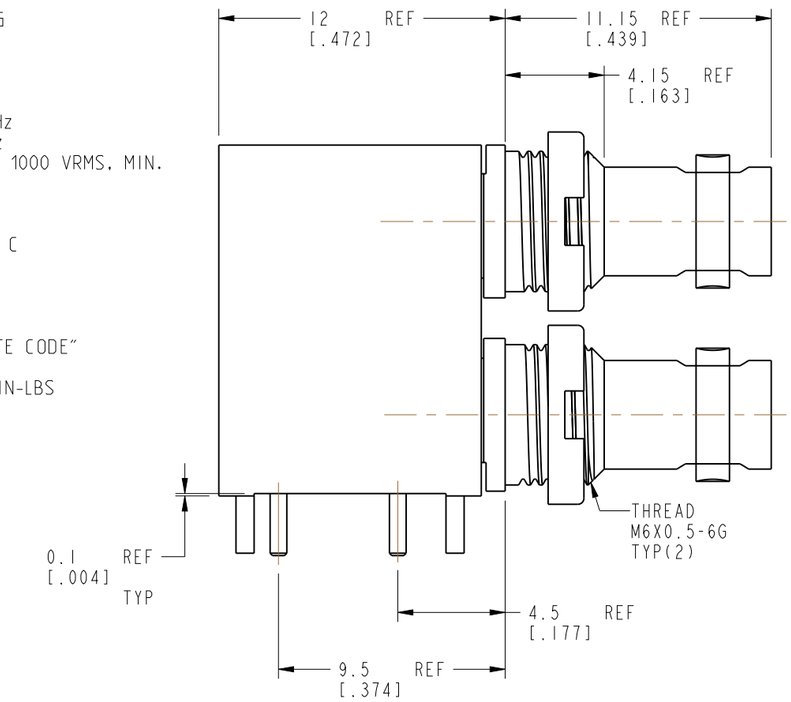

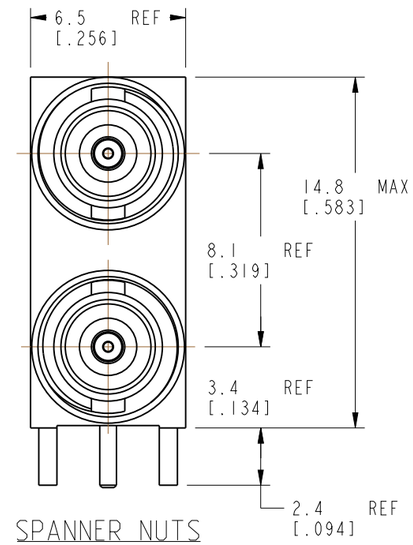

SPANNER NUTS NOT SHOWN

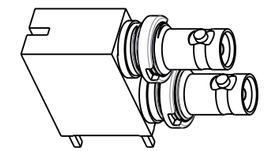

SCALE 1.500

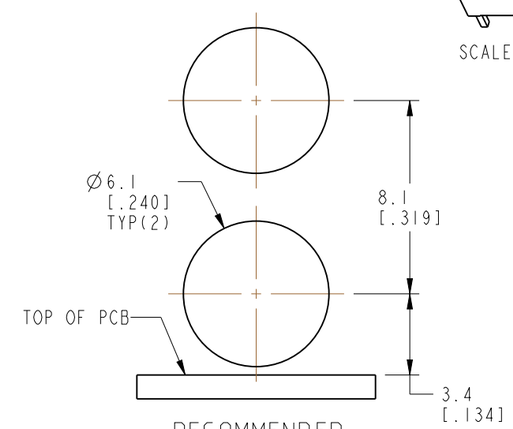

RECOMMENDED PANEL CUTOUTS

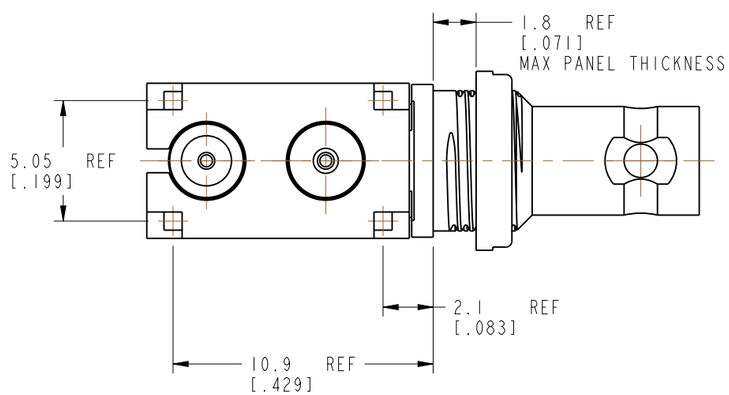

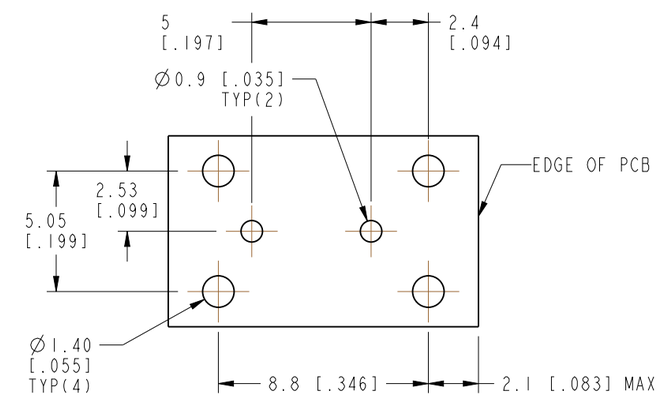

RECOMMENDED PCB LAYOUT

CUSTOMER OUTLINE DRAWING

ALL OTHER SHEETS ARE FOR INTERNAL USE ONLY

UNLESS OTHERWISE SPECIFIED, DIMENSIONS ARE IN METRIC AND TOLERANCES ARE:

<0.5mm	0.5 - 6mm	6 - 30mm	30 - 120mm	ANGLES
± 0.05mm	±0.1mm	±0.2mm	± 0.3mm	±1°

NOTICE - These drawings, specifications, or other data (1) are, and remain the property of Amphenol corp. (2) must be returned upon request; and (3) are confidential and not to be disclosed to any person other than those to whom they are given by Amphenol Corp. the furnishing of these drawings, specifications, or other data by Amphenol Corp., or to any other person to anyone for any purpose is not to be regarded by implication or otherwise in any manner licensing, granting rights to permitting such holder or any other person to manufacture, use or sell any product, process or design, patented or otherwise, that may in any way be related to or disclosed by said drawings, specifications, or other data.

MATERIAL
-
-

REFERENCE
EAR# 8552
REF: ---

CONFIGURATION LEVEL: In Work

FINISH

	DATE
DRAWN B.WYMAN	02-Aug-18
ENGINEER B.WYMAN	02-Aug-18
APPROVED M. HOYACK	30-MAR-20
CAD FILE	

TITLE
HD-BNC JACK
PCB THROUGH HOLE
DUAL PORT

SCALE: 4.0:1.0 | SHEET 2 OF 2

DWG SIZE B | REV A

Amphenol RF
www.amphenolrf.com

DRAWING NO. 34-1131-12G
ITEM NO. 34-1131-12G
PART NO. 34-1131-12G