ARINC 600

RACK AND PANEL CONNECTORS

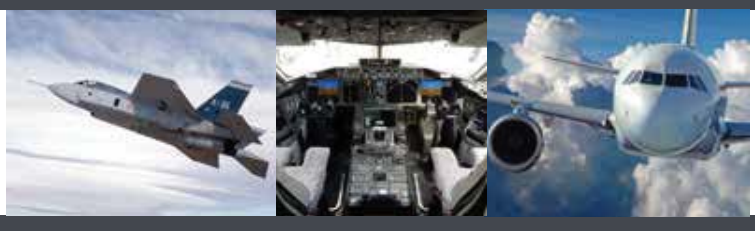

Amphenol CANADA
MILITARY & AEROSPACE

ARINC 600

TABLE OF CONTENTS

Introduction 2
Performance & Material Specification 3

Next Generation ARINC 600:
Introduction 4
Technical Information 5
How-to-order 6
Drawing Shell Size 3 7

ARINC 600:
How-to-order 8
Dimensional Drawings, Size 1, Plug & Receptacle 9
Dimensional Drawings, Size 2, Plug & Receptacle 10
Dimensional Drawings, Size 3, Plug & Receptacle 11
Insert Arrangements Size 1 (A/B) (C) 12
Insert Arrangements Size 2 & 3 (A/B) 13
Insert Arrangements Size 2 & 3 (C) 14
Insert Layout Designator Size 1 15
Insert Layout Designator Size 2 16-18
Insert Layout Designator Size 3 19-21
Mounting Modifiers 22-24
Polarizing Positions 25-27
Panel Cutout 28

Contacts:
Contact Data, Crimp, PC Tails 29
Contact Data, Protective Covers, Transceivers 30
Contacts Crimp Pin & Sockets 31
How-to-order Backshells 32

Introduction to Rack and Panel Connectors

INTRODUCTION

ARINC 600 Connectors are a recognized standard rack and panel connector for Aircraft applications. The ARINC 600 is the successor to the ARINC 404 for many of the new avionic designs. Compared to the ARINC 404, the ARINC 600 features lower mating force contacts, increased contact count and a front release, floating keying system.

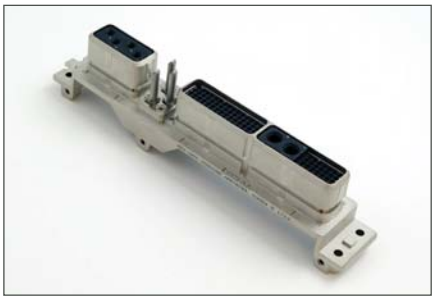

Amphenol's extensive product offering will meet the most demanding needs of our customers. At the design-in stage, Amphenol's sales engineers will work with you to select a connector from our standard product line or coordinate the design of an application specific connector. Amphenol's ARINC 600 rack and panel connectors are designed to meet all relevant ARINC 600 connector specifications.

Amphenol ARINC 600 Connectors offer:

- Low insertion force contacts
- Both environmental and non-environmental versions
- Front removable keying posts
- Field replaceable inserts for size 22 and power contacts
- Up to 800 size 22 contact positions in one connector
- Crimp, coaxial, power, printed circuit, and wire wrap contacts
- Waveguide connections

Contact Amphenol Canada for more information at 416-291-4401 • www.amphenolcanada.com
Download 2D drawings & 3D models using our online configurator.

Performance and Material Specifications

Amphenol "A" Series Connectors are designed per ARINC 600 specifications and utilize pin and socket contacts manufactured in conformance with MIL-C-39029B.

PERFORMANCE SPECIFICATIONS	
Dielectric withstanding voltage (DWV):	1500 Vrms 500 Vrms @ 50,000 ft. (15,240m)
Contact continuous current ratings:	Size 22 - 5.0A: Size 20 - 7.5A Size 16 - 13.0A; Size 12 - 23.0A
Contact resistance:	
Size 22:	8.0 milliohms, initial (max.) 11.0 milliohms, conditioned (max.)
Size 20:	7.0 milliohms, initial (max.) 8.5 milliohms,conditioned (max.)
Size 16:	3.5 milliohms, initial (max.) 5.0 milliohms, conditioned (max.)
Size 12:	2.0 milliohms, initial (max.) 2.5 milliohms, conditioned (max.)
Insulation resistance:	5.0 gigaohms min. at 500 VDC
Engagement/separation force:	Shell size 1 - 27 lbs. (120N) max. Shell size 2 - 60 lbs. (267N) max. Shell size 3 - 105 lbs. (467N) max.
Durability:	500 cycles min. - mating & unmating
Temperature range:	65°C (-86° F) to +125°C (+275° F)
Fluid immersion (Class A only) resistance:	(1) Hydraulic fluid per MIL-H-5606 (2) Lubricating oil (synthetic) per MIL-L-23699 (3) 1:3 mix of isopropyl alcohol & mineral spirits per FED. SPECS. TT-I-735 &TT-T-291 respectively
Vibration:	MIL-STD-1344, Method 2005.1, condition value E: random - 16.4G minimum severity: 8 hours in each of 3 mutually perpendicular planes with 100mA electrical load. No visible damage, breakage, cracking or loosening of parts and no discontinuities exceeding 1 microsecond.
Shock	MIL-STD-1344, Method 2004.1, test condition A: Three shocks in each direction along each of 3 axes, mutually perpendicular to each other. No visible damage, breakage, cracking or loosening of parts and no discontinuities exceeding 1 microsecond.

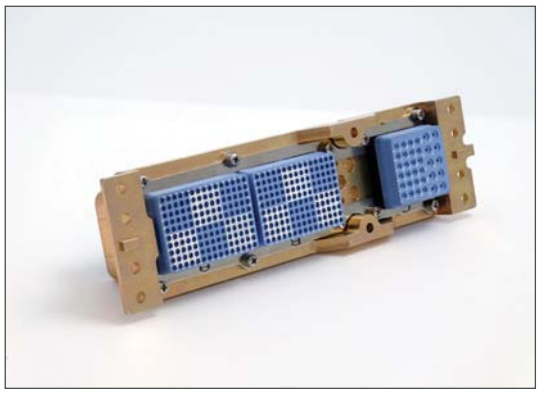

MATERIALS		
DESCRIPTION	MATERIAL	FINISH*
Shell & Backshell	Aluminum Alloy or Composite	"Electroless Nickel, Chem Film (Mil-C-5541, Class 3), RoHS Chem Film (MIL-DTL-5541, Type II, Class 3) OD Chromate, Tin, Gold, Zinc Nickel, Yellow CAD or Nickel Fluorocarbon Polymer (Durmalon)"
Hardware & Polarizing Keys	Stainless Steel	Passivated or Nickel Plated
Inserts	Thermoset or Thermoplastic	---
	Aluminum Alloy	Same as Shell
Grommets & Face Seal	Fluorosilicone Elastomer	---
EMI Spring	Copper Alloy	Nickel Plated, Gold
Shell Seal	Fluorosilicone Elastomer	---
Contacts	Copper Alloy	Gold over Nickel, Solder Dipping is available in both RoHS and non-RoHS Compliance (selective plating on PCB Contacts available)

* other platings available on request

Next Gen ARINC 600 Stamped & Formed Contacts

Introduction

Introducing Amphenol Canada's ARINC 600 Next Generation Stamped & Formed Contacts Technology. Size 22 Sockets are now available in stamped and formed designs in both PCB and Compliant styles.

The Next Gen ARINC 600 is available to replace your standard inserts and contacts with this intelligent design. This will provide cost savings and 25% reduction in weight

These inserts and contacts are fully tested and in compliance with all ARINC 600 specifications and RoHS compliant.
The contacts are designed using stamped and formed method with overmolding technology. They are completely inter-changeable and mateable with all existing Size 22 contacts. Contact Amphenol Canada for more information.

PRODUCT FEATURES

- High-speed
- Compact
- Durable
- Low -cost
- Filtered

CUSTOMIZATION

Consult Amphenool Canada for additoinal information on custom applications.

Contact Amphenol Canada for more information at 416-291-4401 • www.amphenolcanada.com
Download 2D drawings & 3D models using our online configurator.

Next Gen ARINC 600

Amphenol CANADA

The Next Generation of high-quality ARINC 600 interconnect

FEATURES

- Intermateable with existing plugs
- 24% weight saving
- Lower cost
- High precision stamped and formed and selectively plated, size 22 contacts
- Available in PC Tail, press-fit compliance tail
- Overmolded wafer inserts to address humidity performance and to eliminate potential solder wicking issues
- Rear removable contacts in rows of 10
- Interchangeable inserts with existing shells
- Equivalent electrical performance of conventional design
- RoHS compliant
- US patent #9,362,638

MECHANICAL

- Shell: Aluminum allo per SAE QQA.
- Shell Plating: Nickel, yellow iridite or chem film
- Contact: High performance copper alloy with 50µ" gold plating in mating area. Tin dipped contacts with optional gold plating available
- Insulator: Thermoplastic overmolded wafers

ENVIRONMENTAL

- Temperature Range: -65° to +125°C
- High Temperature Tolerance: 1000 hrs min. at 125°C
- Process Temperatures: 270°C for 10 sec. wave solder 260°C for 2 min. vapor phase
- Salt Spray: per MIL-STD-1344, method 1001, cond. B
- Humidity: per MIL-STD-1344, method 1002.1, type II

ELECTRICAL

- Dielectric Withstand Voltage: Sea Level-1500 Vrms, 15,000 m: 500 Vrms
- Voltage Rating: 500 Vrms max.;125 Vrms at 15,000 m
- Insulation Resistance: 5.0 GW min. at 500 Vdc
- Size 22 Contact Current Rating: 5.0 Adc, continuous
- Contact Resistance: per MIL-STD-1344, method 3004-1

APPLICATIONS

Commercial
- Navigation/Radar
- Engine Controls
- Airframe & Landing Gear
- In-Flight Entertainment (IFE)

Military
- Tactical/Mission Systems
- Power Distribution & Control
- Weapons Systems
- Avionics Mission Systems
- Radar
- Engine Controls
- Airframe & Landing Gear
- Weapons Systems

How to Order - Next Generation Board Mount Receptacle's

For Plugs and Standard Receptacles, please see page 9

PART NUMBER KEY

1. Connector Series	2.Class	3. Shell Style	4. Insert Layout Designator PG 15-21	5. Shell Type	6. Connector Mounting Modifier PG 22-24	7. Polarizing Position PG 25-27	8. Contact Modifier Material
A	L	3	313	4	00	01	NGX

STEPS	PART #	DESCRIPTION
1. CONNECTOR SERIES	A	ARINC 600
2. CLASS	L	PC Tail
	M	PC Tail & Rear Removable Crimp Contacts (Typically RF or power)
3. SHELL SIZE	1	Max. contact capacity - 160
	2	Max. contact capacity - 400
	3	Max. contact capacity - 800
4. INSERT LAYOUT PAGE 15-21	PAGES 15-21	The connector layout designator number represents the total number of contacts within the layout including waveguides. Consult Amphenol Canada Corporation for further availability of insert combinations. See pages 15-21.
5. SHELL TYPE	4	Receptacle
	5	Receptacle W/ Integral Stand-Offs
	Required for Press-Fit designs but can also be used on PC Tail Contacts	
6. MOUNTING MODIFIER PAGE 22-24	PAGES 22-24	See charts on pages 22- 24. Consult factory if other modifications are required.
7. POLARIZING POSITION PAGE 25-27	PAGES 25-27	Polarizing posts or keys not installed but supplied with connector see pages 25-27.
8. CONTACT MODIFIER MATERIAL	NGX	S&F TAIL EXTENSION
	NGA	.250" PC TAIL, ALL CONTACTS INCLUDED EXCEPT RF
	NGB	.375" PC TAIL, ALL CONTACTS INCLUDED EXCEPT RF
	G & T Options require Shell Type '5 w/ Integrated Stand-Offs'	
	NGG	.040" (1.02MM) Press Fit - GOLD, ALL CONTACTS INCLUDED, EXCEPT RF
	NGT	.040" (1.02MM) Press-Fit - TIN, ALL CONTACTS INCLUDED, EXCEPT RF

Contact Amphenol Canada for more information at 416-291-4401 • www.amphenolcanada.com
Download 2D drawings & 3D models using our online configurator.

RECEPTACLE

Panel Cut-Out
see page 28

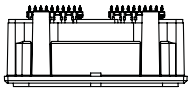

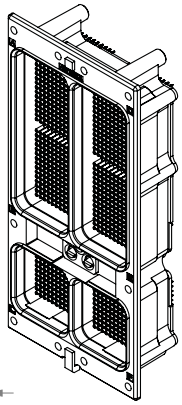

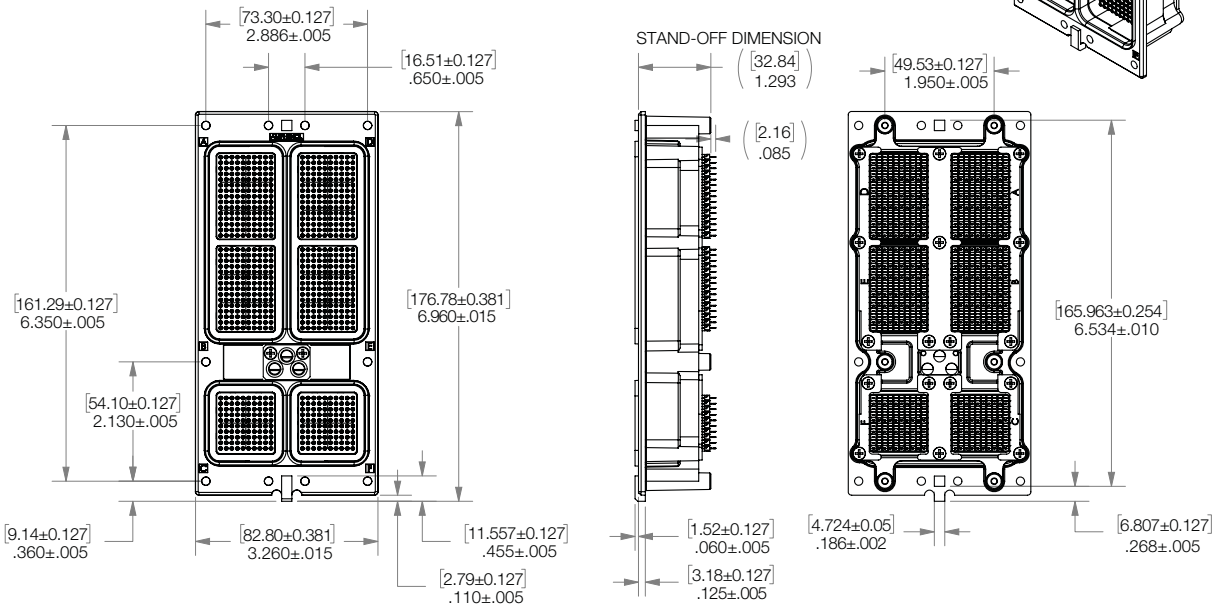

How to Order - ARINC 600

PART NUMBER KEY

1. Connector Series	2.Class	3. Shell Style	4. Insert Layout Designator PG 15-21	5. Shell Type	6. Mounting Modifier PG 22-24	7. Polarizing Position PG 25-27	8. Contact Modifier Material
A	D	3	313	3	00	01	OO

STEPS	PART #	DESCRIPTION
1. CONNECTOR SERIES	A	ARINC 600
2. CLASS	D	Non-environmental (rear release, crimp contacts)
	E	RoHS Environmental (rear release, crimp contacts)
	F	Non-environmental (front release, solder and wrap post #22 contacts, rear release all others).
	C	Same as E, less O-rings on plug side
	S	Environmental (O-ring is used to seal between connector shell and insulators) with rear release, crimp contacts.
	Y	All positions front release (except coax/triax)
	J	All positions front release (all sizes)
3. SHELL SIZE PAGE 9-11	1	Max. contact capacity - 160
	2	Max. contact capacity - 400
	3	Max. contact capacity - 800
4. INSERT LAYOUT PAGE 15-21	PAGES 15-21	The connector layout designator number represents the total number of contacts within the layout including wave guides. Consult Amphenol Canada Corporation for further availability of insert combinations. See pages 15-21.
5. SHELL TYPE	3	Plug (rack side)
	4	Receptacle (box side)
6. MOUNTING MODIFIER PAGE 22-24	PAGES 22-24	See charts on pages 22 -24. Consult factory if other modifications are required.
7. POLARIZING POSITION PAGE 25-27	PAGES 25-27	Polarizing posts or keys not installed but supplied with connector see pages 25-27.
8. CONTACT MODIFIER MATERIAL	OO	Rear release, crimp, signal and power contacts supplied with connector (when applicable)
	FO	Contacts not supplied with connector (FO not stamped on connector)
	SA	Front release .025 (0.63) D. x .150 (3.81) solder post and crimp, rear release power contacts (when applicable) supplied installed in connector
	SB	Front release .025 (0.63) D. x .250 (6.35) solder post and crimp, rear release power contacts (when applicable) supplied installed in connector
	SC	Front release .025 (0.63) D. x .375 (9.53) solder post and crimp, rear release power contacts (when applicable) supplied installed in connector.
	SD	Front release .025 (0.63) D. x .500 (12.7) solder post and crimp, rear release power contacts (when applicable) supplied installed in connector
	WA	Front release .025 (0.63) Sq. x .250 (6.35) (1 wrap) wrap post and crimp, rear release power contacts (when applicable) supplied installed in connector
	WB	Front release .025 (0.63) Sq. x .375 (9.53) (2 wraps) wrap post and crimp, rear release power contacts (when applicable) supplied installed in connector
	WC	Front release .025 (0.63) Sq. x .500 (12.7) (3 wraps) wrap post and crimp, rear release power contacts (when applicable) supplied installed in connector
	WD	Front release .025 (0.64) Sq. x .641 (16.28) (3 wraps) wrap post and crimp, rear release power contacts (when applicable) supplied installed in connector

Contact Amphenol Canada for more information at 416-291-4401 • www.amphenolcanada.com
Download 2D drawings & 3D models using our online configurator.

PLUG

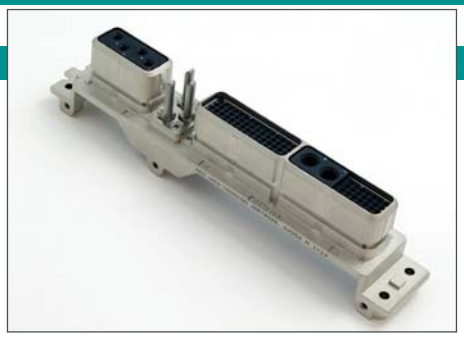

Panel Cut-Out
see page 28

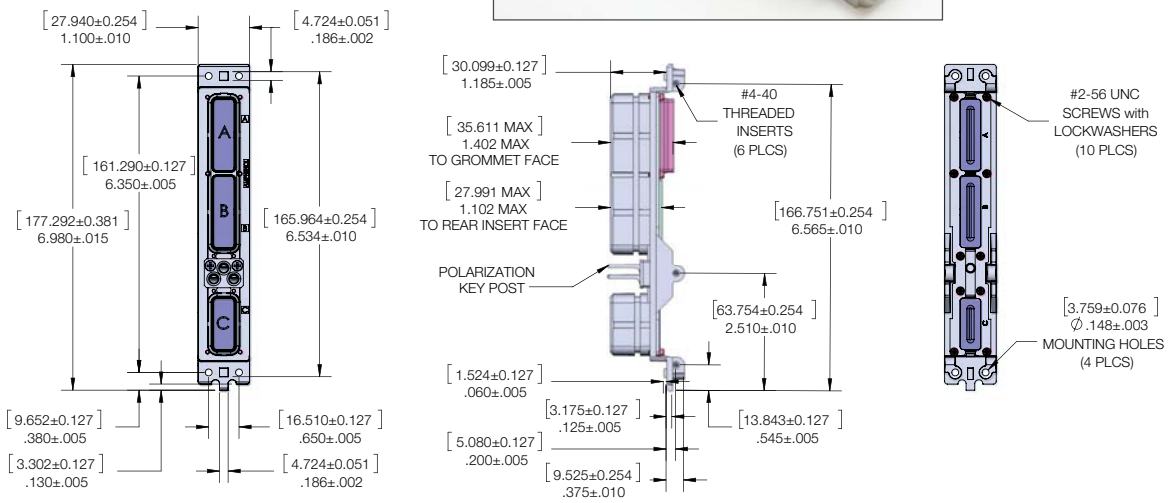

RECEPTACLE

Panel Cut-Out
see page 28

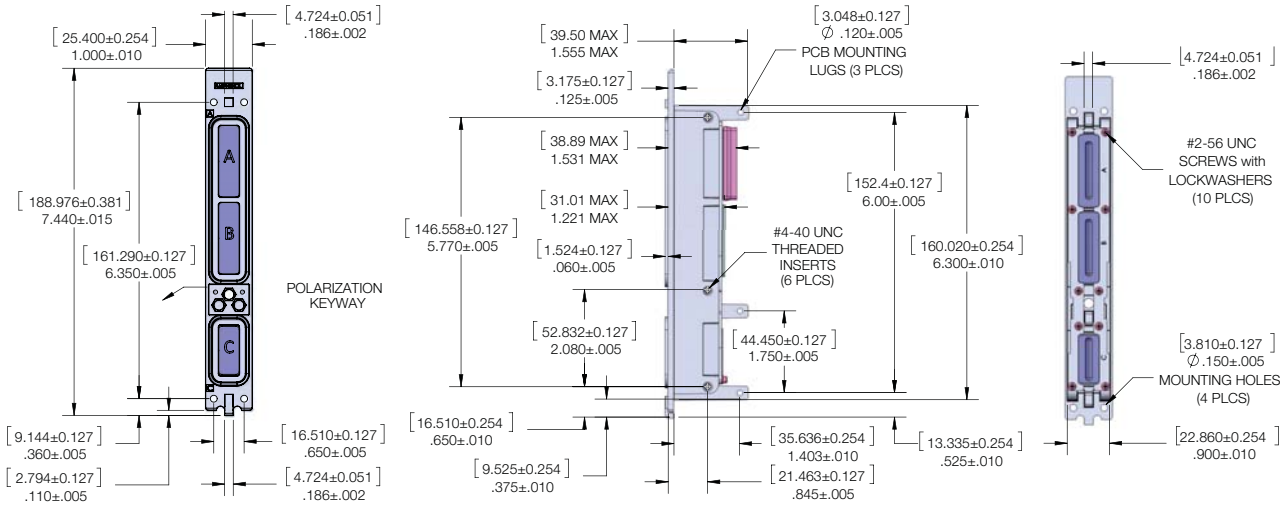

* Indicates area where "AMPHENOL", catalog number and date code will be ink stamped per 9-5788-3. Dimensions are shown in inches, (mm). All dimensions for reference only.

Dimensional Drawings
Shell Size 2

PLUG

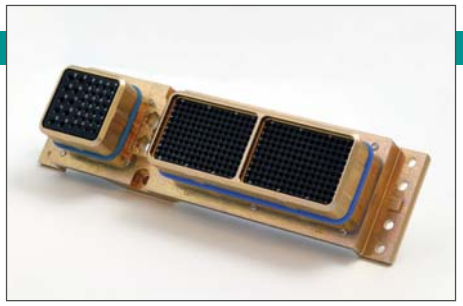

Panel Cut-Out
see page 28

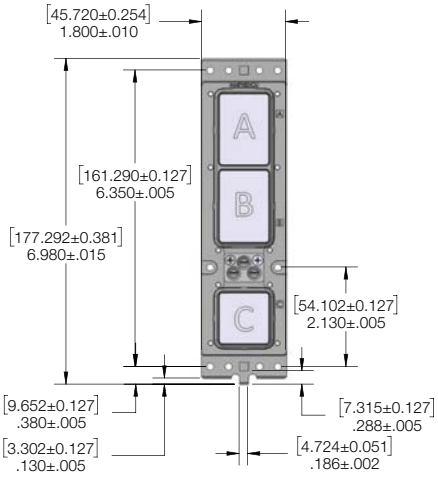

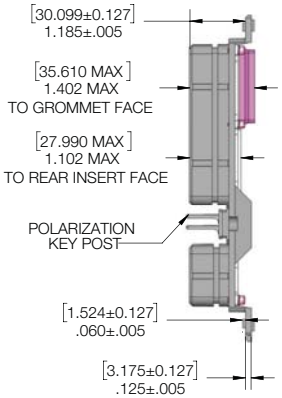

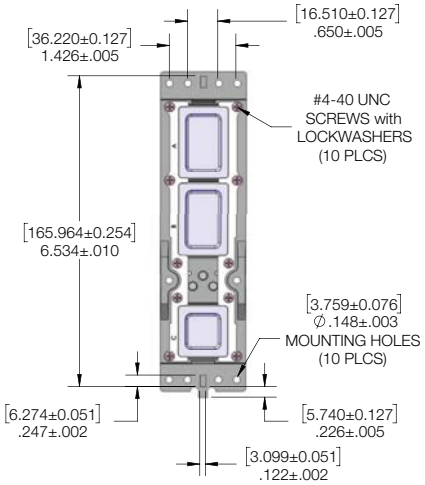

RECEPTACLE

Panel Cut-Out
see page 28

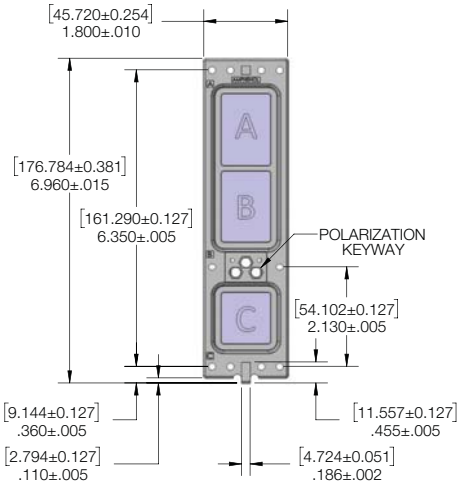

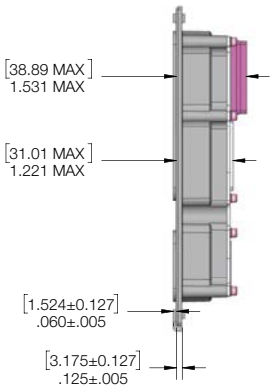

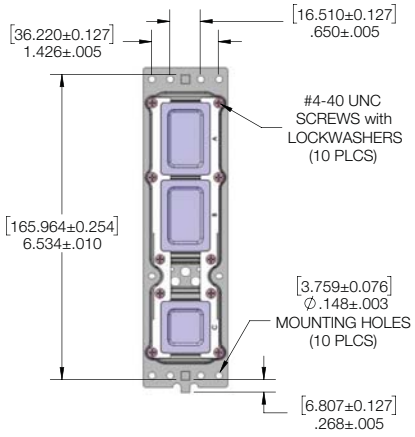

* Indicates area where "AMPHENOL", catalog number and date code will be ink stamped per 9-5788-3. Dimensions are shown in inches, (mm). All dimensions for reference only.

Contact Amphenol Canada for more information at 416-291-4401 • www.amphenolcanada.com
Download 2D drawings & 3D models using our online configurator.

PLUG

Panel Cut-Out
see page 28

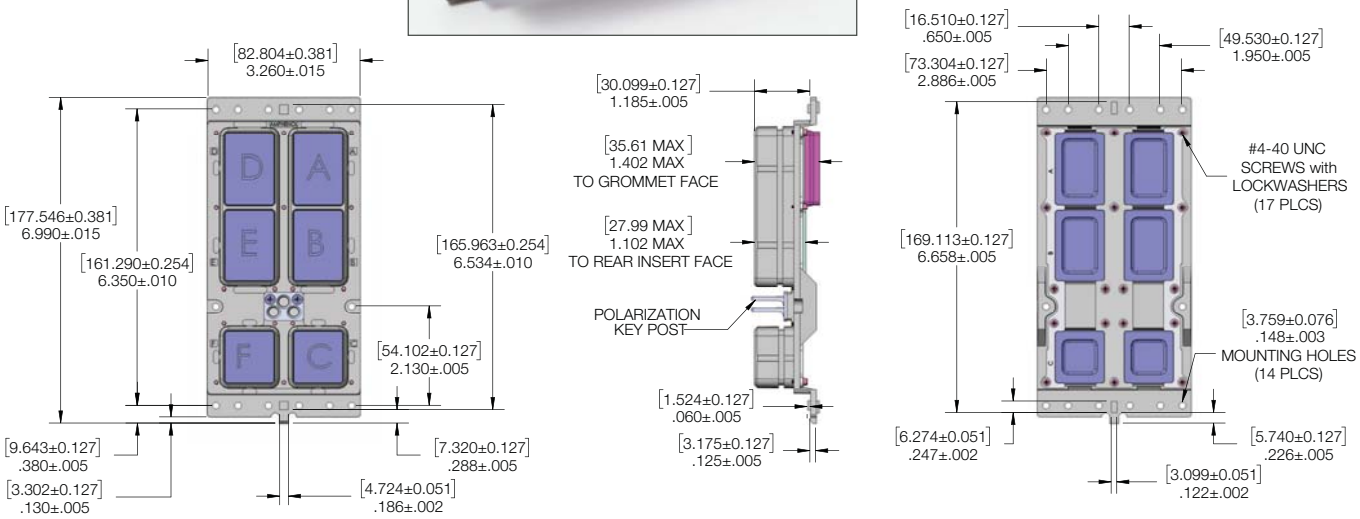

RECEPTACLE

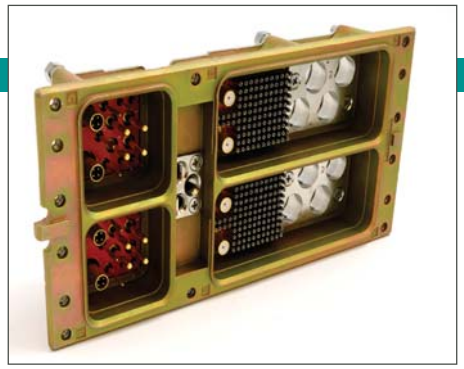

Panel Cut-Out
see page 28

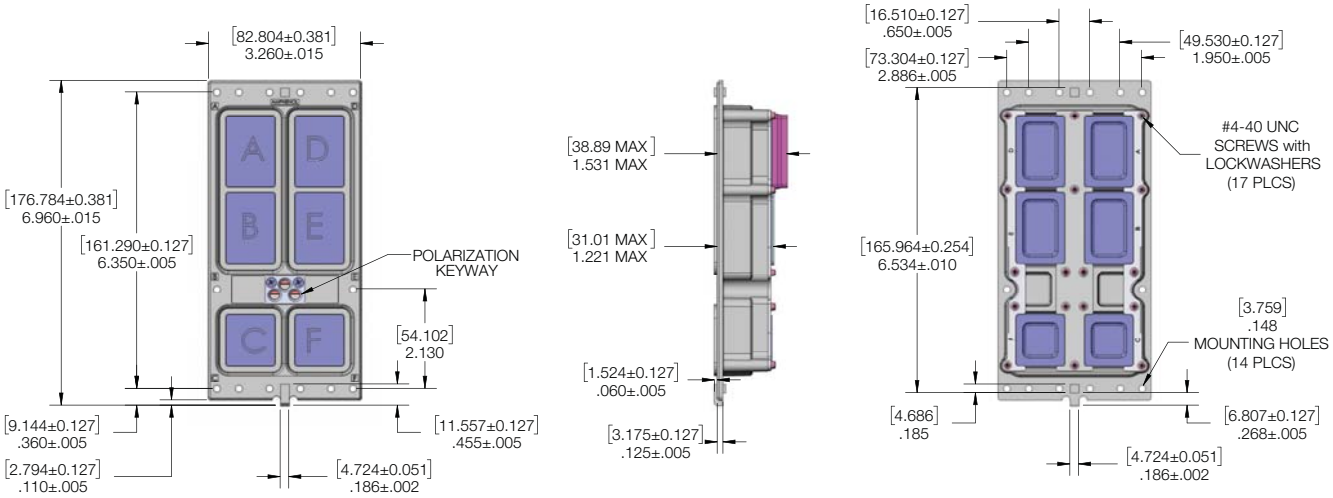

* Indicates area where "AMPHENOL", catalog number and date code will be ink stamped per 9-5788-3.
Dimensions are shown in inches, (mm). All dimensions for reference only.

Insert Arrangements

Size 1 (A/B)

Size 1 Signal (A/B)

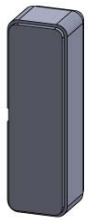

(0)	BLANK
QTY	Size

Q

(4)	4Q4
QTY	Size
4	8 Q

C T

(4)	4C4 4T4
QTY	Size
4	8 C, T

(8)	8
QTY	Size
8	12

(20)	20
QTY	Size
20	16

C T

(30)	30C2 30T2
QTY	Size
28	22
2	8 C, T

(32)	32
QTY	Size
8	16
24	20

(42)	42
QTY	Size
42	20

(60)	60
QTY	Size
60	22

Size 1 Power (C)

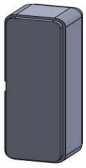

(0)	BLANK
QTY	Size

Q

(3)	3Q3
QTY	Size
3	8 Q

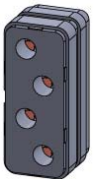

(4)	4
QTY	Size
4	12

C T

(5)	5C2 5T2
QTY	Size
2	16
1	12
2	5 C, T

(6)	6
QTY	Size
6	12

F

(12)	12F12
QTY	Size
12	16 F

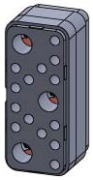

(17)	17
QTY	Size
3	12
14	20

(22)	22
QTY	Size
6	16
16	20

(30)	30
QTY	Size
30	20

(40)	40
QTY	Size
40	22

C COAX T TWINAX OR TRIAX F FIBER Q QUADRAX

Note: Inserts are interchangable between Coax, Twinax, and Triax contacts

Contact Amphenol Canada for more information at 416-291-4401 • www.amphenolcanada.com
Download 2D drawings & 3D models using our online configurator.

Insert Arrangements
Size 2 & 3 (A/B)

(0)	BLANK
QTY	Size

C T

(2)	2C2 2T2
QTY	Size
2	1 C, T

C T

(4)	4C4 4T4
QTY	Size
4	1 C, T

C T

(10)	10C10 10T10
QTY	Size
10	8 C, T

Q

(11)	11Q11
QTY	Size
11	8 Q

F

(17)	17CF5
QTY	Size
12	12
5	16 F

Q

(18)	18Q6
QTY	Size
12	16
6	8 Q

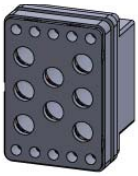

C T

(18)	18C8 18T8
QTY	Size
10	16
8	8 C, T

F Q

(20)	20F12Q8
QTY	Size
12	16 F
8	8 Q

(24)	24
QTY	Size
24	12

C T

(28)	28C8 28T8
QTY	Size
10	22
10	16
8	8 C, T

(35)	35
QTY	Size
35	16

F

(36)	36F36
QTY	Size
36	16F

C T

(49)	47C2 47T2
QTY	Size
47	20
2	8 C, T

(60)	60
QTY	Size
60	20

C T

(71)	71C1 71T1
QTY	Size
70	22
1	1 C,T

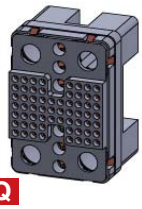

Q

(72)	72Q4
QTY	Size
62	22
6	16
4	8 Q

C T

(82)	82C12 82T12
QTY	Size
70	16
12	8 C,T

(110)	110
QTY	Size
100	22
5	20
5	12

C T

(120)	120C2 120T2
QTY	Size
118	22
2	8 C, T

Q

(120)	120Q2
QTY	Size
118	22
2	1 Q

(121)	121
QTY	Size
110	22
6	20
5	16

(126)	126
QTY	Size
120	22
6	16

(150)	150
QTY	Size
150	22

C COAX T TWINAX OR TRIAX F FIBER Q QUADRAX

Note: Inserts are interchangable between Coax, Twinax, and Triax contacts

Insert Arrangements

Size 2 & 3 (C)

(0)	BLANK
QTY	Size

Q

(6)	6Q6
QTY	Size
6	8 Q

C T

(6)	6C6 6T6
QTY	Size
6	8 C, T

C T Q

(1O)	10C4Q1 10T4Q1
QTY	Size
5	20
4	8 C, T
1	8 Q

C T F

(12)	12F5C2 12F5T2
QTY	Size
1	16
4	12
2	8 C, T
5	16 F

Q

(13)	11Q2
QTY	Size
4	20
3	16
4	12
2	5 Q

C T

(13)	13C2 13T2
QTY	Size
4	20
3	16
4	12
2	5 C, T

C T

(15)	11C4 11T4
QTY	Size
11	16
4	8 C, T

(16)	16
QTY	Size
16	12

C T F

(17)	17F12C2 17F12T2
QTY	Size
3	16
2	8 C, T
12	16 F

C T Q

(18)	18C4Q2 18T4Q2
QTY	Size
10	22
2	12
4	12 C, T
2	8 Q

F

(20)	20F12
QTY	Size
4	20
4	12
12	16 F

C T

(24)	24C4 24T4
QTY	Size
20	20
4	8 C, T

F

(24)	24F24
QTY	Size
24	16 F

(24)	24
QTY	Size
12	22
12	12

Q

(24)	24Q4
QTY	Size
20	20
4	8 Q

(25)	25
QTY	Size
25	16

(28)	28
QTY	Size
14	22
14	12

(34)	34
QTY	Size
24	20
10	16

(59)	59
QTY	Size
50	22
5	16
4	12

C T

(64)	62C2 62T2
QTY	Size
60	22
2	16
2	8 C, T

Q

(70)	68Q2
QTY	Size
68	22
2	8 Q

(85)	85
QTY	Size
80	22
4	20
1	16

(100)	100
QTY	Size
100	22

C COAX T TWINAX OR TRIAX F FIBER Q QUADRAX

Note: Inserts are interchangable between Coax, Twinax, and Triax contacts

Contact Amphenol Canada for more information at 416-291-4401 • www.amphenolcanada.com
Download 2D drawings & 3D models using our online configurator.

Insert Layout Designator
Size 1

PART NUMBER KEY

1. Connector Series	2.Class	3. Shell Style	4. Insert Layout Designator PG 15-21	5. Shell Type	6. Mounting Modifier PG 22-24	7. Polarizing Position PG 25-27	8. Contact Modifier Material
A	D	3	313	3	00	01	OO

SIZE 1 ARINC 600				
# OF CONTACTS	INSERT LAYOUT DESIGNATOR	SHELL CAVITY INSERT POSITION		
		A	B	C
5	005	EMPTY	EMPTY	5C2
30	030Q	28Q2	DUMMY	DUMMY
35	035	30T2	DUMMY	5C2
48	048Q	4Q4	4Q4	40
60	060	EMPTY	60	EMPTY
60	A060	60	EMPTY	EMPTY
60	C060	60	DUMMY	DUMMY
65	065	EMPTY	60	5C2
65	065A	DUMMY	60	5C2
65	A065	60	DUMMY	5C2
65	065B	DUMMY	60	5C2
65	065Q	60	DUMMY	5Q2
65	B065	30T2	30T2	5C2
70	070	DUMMY	30T2	40
70	A070Q	EMPTY	28Q2	40
90	090Q	60	28Q2	DUMMY
94	094	30T2	60	4
95	095	60	30T2	5C2
95	095Q	60	28Q2	5C2
95	095A	30T2	60	5C2
95	A095Q	60	28Q2	3Q2
100	100	30T2	30T2	40
100	100A	60	DUMMY	40
112	112T	60	30T2	22
120	120	60	60	EMPTY
120	A120	60	60	DUMMY
124	124	60	60	4
125	125	60	60	5C2
130	130	60	30T2	40
160	160	60	60	40

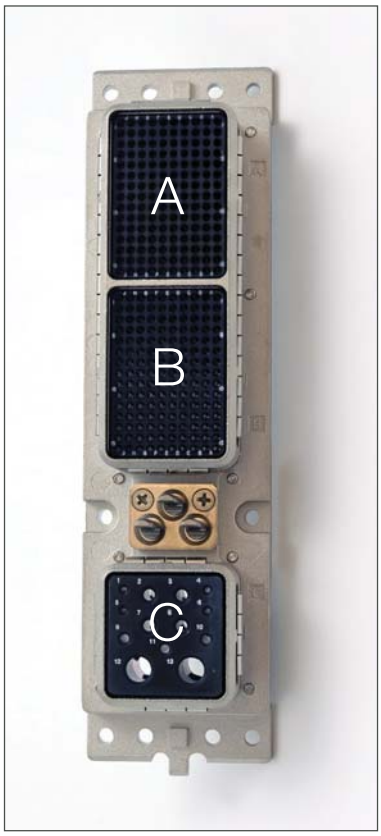

Insert Layout Designator

Size 2

ARINC 600

SIZE 2 ARINC 600				
# of contacts	INSERT LAYOUT DESIGNATOR	Shell Cavity Insert Position		
		A	B	C
11	011Q	11Q11	EMPTY	EMPTY
13	013	EMPTY	EMPTY	13C2
17	017	2C2	2C2	13C2
20	020	DUMMY	DUMMY	20F12
20	020F	DUMMY	DUMMY	20F12
24	024	DUMMY	11Q11	11Q2
24	024Q	DUMMY	11Q11	13C2
26	26	10C10	10C10	6C6
28	028Q	11Q11	11Q11	6Q6
28	A028Q	DUMMY	4C4	20Q4
30	030F	DUMMY	18T8	12F5C2
33	033	10T10	10T10	13C2
33	033Q	11Q11	11Q11	13C2
33	033QT	10T10	10T10	11Q2
33	A033Q	11Q11	11Q11	11Q2
34	034Q	11Q11	10T10	11Q2
35	035	DUMMY	11Q11	20Q4
39	039QF	11Q11	11Q11	17F12Q2
40	040F	DUMMY	28T8	12F5C2
45	045Q	11Q11	BLANK	34
54	054QF	20F12Q8	BLANK	34
56	056A	28T8	28T8	DUMMY
59	059	EMPTY	EMPTY	59
60	060	60	DUMMY	DUMMY
60	A060	24	24	12 custom
65	065Q	11Q11	11Q11	41Q2
66	066	DUMMY	60	6T6
67	067Q	121	10Q10	6Q6
68	068Q	121	11Q11	6Q6
69	069	28T8	28T8	13C2
69	069QC	DUMMY	10Q6C4	59
69	A069	10T10	DUMMY	59
70	070Q	11Q11	DUMMY	59
70	070T	4C4	4C4	62T2
71	071	EMPTY	71C1	1
71	A071	71C1	EMPTY	EMPTY
73	073	DUMMY	60	13C2
74	074Q	4C4	11Q11	59
75	75C	60	2C2	13C2
76	076Q	10T10	60	6Q6
79	079	10T10	10T10	59
81	081	11T11	11T11	59
81	081Q	11Q11	11Q11	59
82	082	24	24	34
84	084	DUMMY	71C1	13C2
84	084QT	11Q11	11Q11	62T2
85	085	WAVE	71C1	13C2
85	085B	W1	71C1	13C2
85	A085	71C1	WAVE	13C2
86	086	C2	71C1	13C2
86	086Q	11Q11	11Q11	62Q2
86	86M	2C2	71C1	13C2
88	088QC	71C1	4C4	11Q2
92	092Q	11Q11	11Q11	68Q2
93	093	4C4	4C4	85
94	094	60	DUMMY	34
94	094A	10T10	71C1	13C2
95	095F	36F36	DUMMY	59
95	95F	DUMMY	36F36	59
96	096A	68Q4	11Q11	13C2

SIZE 2 ARINC 600				
# of contacts	INSERT LAYOUT DESIGNATOR	Shell Cavity Insert Position		
		A	B	C
96	096Q	DUMMY	11Q11	85
96	096QF	11QF11	Blank	85
98	098	4C4	35	59
99	099CF	50	36F36	13C2
100	100	DUMMY	EMPTY	100
105	105	10T10	10T10	85
105	A105	71C1	BLANK	59
105	105F	11Q11	60	34
107	107Q	11Q11	11Q11	85
111	111Q	DUMMY	11Q11	100
111	111QC	68Q4	11Q11	32C2
112	112	24	24	64T2
112	112Q	24	24	62Q2
115	115Q	4C4	11Q11	100
115	115	150	2C2	13C2
116	116QF	20F12Q8	11Q11	85
116	A116QF	11Q11	A20F12Q8	85
118	118	24	60	34
119	119	60	DUMMY	59
120	120	DUMMY	120T2	DUMMY
121	121	DUMMY	121	DUMMY
122	122Q	11Q11	11Q11	100
123	A123	4C4	60	59
123	123	60	4C4	59
124	124Q	28	28	68Q2
124	124	DUMMY	24	100
126	126Q	24	68Q4	34
127	127Q	DUMMY	121	6Q6
128	128	4C4	24	100
130	130Q	10T10	118Q2	DUMMY
131	131FQ	20F12T8	11Q11	100
131	131Q	121	4C4	6Q6
131	131QC	11Q11	118Q2	DUMMY
131	131	121	10T10	DUMMY
133	133Q	DUMMY	118Q2	13C2
133	A133	120T2	DUMMY	13C2
133	133	DUMMY	120T2	13C2
134	134Q	35	35	68Q2
135	135Q	118Q2	2C2	13C2
137	137A	4C4	120T2	13C2
137	137B	120T2	4C4	13C2
137	137D	4C4	120T2	13C2
137	137E	4C4	120C2	13C2
137	137Q	121	10Q10	6Q6
137	137	121	10T10	6T6
138	138	11Q11	6Q6	121
138	138CF	121	DUMMY	17F12Q2
138	138Q	11Q11	121	6Q6
138	A138Q	121	11Q11	6Q6
138	B138Q	121A	4C4	11Q2/13Q2
140	140	110	24	6Q6
141	141FQ	20F12Q8	121	DUMMY
141	T141	120T2	10T10	13C2
142	142	71C1	71C1	EMPTY
143	143	24	60	59
143	A143	120T2	10T10	13C2
143	143Q	11Q11	118Q2	12F5C2
143	A143Q	118Q2	10T10	13C2
143	B143Q	118Q2	10T10	11Q2
144	144Q	118Q2	11Q11	13C2
144	A144Q	120T2	11Q11	13C2

Contact Amphenol Canada for more information at 416-291-4401 • www.amphenolcanada.com
Download 2D drawings & 3D models using our online configurator.

Insert Layout Designator

Size 2

SIZE 2 ARINC 600				
# of contacts	INSERT LAYOUT DESIGNATOR	Shell Cavity Insert Position		
		A	B	C
144	144QT	11Q11	120T2	11Q2
144	C144Q	11Q11	120Q2	11Q2
145	145Q	DUMMY	118Q2	25
148	148A	24	24	100
148	148	71C1	18T8	59
152	152Q	24	28T8	100
153	153TF	20F12T8	120T2	13C2
154	154	60	60	34
155	155	71C1	71C1	13C2
156	156Q	11Q11	120Q2	25
156	156Q	150	DUMMY	6Q6
156	A156	28T8	28T8	100
156	B156	150	DUMMY	6T6
156	B156Q	150	DUMMY	6Q6
158	158M	2C2	71C1A	85
158	158T	110	24	24T4
161	161Q	150	EMPTY	11Q2
162	162CF	121	24	17F12Q2
163	163A	150	DUMMY	13C2
163	163B	DUMMY	150	13C2
163	A163	150	EMPTY	13C2
163	163QF	36F36	121	6Q6
163	163	EMPTY	150	13C2
164	164	150	WAVE	13C2
164	A164	WAVE	150	13C2
165	165M	150	2C2	13C2
165	165Q	11Q11	118Q2	34
165	165Q	150	2C2	13Q2
165	165R	150	2C2	13Q2
165	A165	2C2	150	13C2
165	165	150	2C2	13C2
167	167	4C4	150	13C2
167	167	150	4C4	13C2
167	167C	4C4	150	13C2
167	167Q	150	11Q11	6T6
167	167QC	4C4	150	11Q2
167	A167Q	11Q11	150	6Q6
167	B167Q	150	11Q11	6Q6
168	168Q	150	18Q8	DUMMY
170	170	35	35	100
171	171	WAVE	71C1	100
173	173A	10T10	150	13C2
173	173QF	17C12F5	150	6Q6
173	173	150	10T10	13C2
174	174	150	24	DUMMY
174	174Q	150	11Q11	13C2
174	A174Q	DUMMY	150	20Q4
174	B174Q	150	11Q11	11Q2
174	C174Q	11Q11	150	11Q2
174	D174Q	11Q11	150	13C2
174	E174Q	10Q10	150	11T2
174	F174Q	11Q11	150	11T2
174	T174	DUMMY	150	24T4
174	T174Q	150	18T8	6Q6
174	174C	11C11	150	13W2
175	175	150	DUMMY	25
178	178QF	150	11Q11	17F12Q2
187	187	121	60	6T6
184	B184	24	60	100
184	184	150	DUMMY	34
184	A184	4C4	121	59

SIZE 2 ARINC 600				
# of contacts	INSERT LAYOUT DESIGNATOR	Shell Cavity Insert Position		
		A	B	C
188	188	150	4C4	34
191	191T	28T8	150	13C2
194	194F	150	24	20F12
194	A194Q	10Q10	150	34
194	194Q	150	10Q10	34
195	195Q	150	11Q11	34
195	A195Q	11Q11	150	34
195	B195QF	20F12Q8	150	25
198	198Q	150	24	20Q4
199	199FC	150	36F36	13C2
199	C199Q	71C1A	118Q2	12F5C2
200	200Q	11Q11	121	68Q2
201	201CF	17F5	150	34
202	202	150	18tT8	34
202	202Q	71C1A	118Q2	12F5C2
205	205A	120T2	DUMMY	85
205	205	71C1	121	13C2
208	208	150	24	34
209	209A	4C4	120T2	85
209	209Q	150	35	20Q4
209	C209Q	4C4	118Q2	85
209	A209	EMPTY	150	59
209	B209	150	DUMMY	59
209	A209Q	150	11Q11	46Q2
209	209	DUMMY	150	59
213	213	150	4C4	59
215	215Q	11Q11	120T2	85
215	215	121	60	34
218	218	110	49T2	59
219	219	150	10T10	59
220	220	110	110	DUMMY
220	A220	150	60	10
220	220B	60	60	100
220	220Q	11Q11	150	59
223	223	150	60	13C2
223	223FQ	150	11Q11	62F12
225	225QF	20F12Q8	118Q2	85
225	225Q	11Q11	150	62Q2
229	229QF	20F12T8	150	59
231	231Q	11Q11	150	68Q2
231	231	10T10	121	100
232	232Q	11Q11	121	100
234	A234	71C1	150	13C2
234	B234M	71C1A	150	13C2
234	234	150	71C1	13C2
235	235	150	DUMMY	85
237	237A	150	28T8	59
238	238F	18T8	120T2	100
242	242	121	121	DUMMY
242	242A	71C1	71C1	100
242	242B	121	121	EMPTY
244	244	150	60	34
244	244A	60	150	34
245	245F	150	36F36	59
245	245Q	150	10T10	85
245	245T	10T10	150	85
245	A245Q	10Q10	150	85
246	246Q	150	11Q11	85
246	246	120T2	120T2	6T6
248	248	121	121	6T6
248	248A	28T8	120T2	100

Insert Layout Designator

Size 2

SIZE 2 ARINC 600				
# of contacts	INSERT LAYOUT DESIGNATOR	Shell Cavity Insert Position		
		A	B	C
248	248K	121	121	6T6
250	250	EMPTY	150	100
250	250A	150	DUMMY	100
253	253C	120C2	120C2	11Q2
253	253Q	120T2	120T2	11Q2
253	A253Q	120T2	118Q2	11Q2
253	253	120T2	120T2	13C2
254	254F	150	4C4	100
255	255Q	121	121	11Q2
260	260	150	10T10	100
261	261Q	150	11Q11	100
262	262F	121	121	20F12
262	262Q	150	12F4	100
263	263T	28T8	150	85
264	264Q	118Q2	118Q2	24T4
264	A264Q	118Q2	118Q2	20Q4
266	266	150	110	6P6
268	268FQ	150	18T8	100
270	270FQ	20F12T8	150	100
271	271F	150	36F36	85
271	A271	121	150	Dummy
274	A274	150	24	100
274	274A	120T2	120T2	34
274	274	24	150	100
276	276	121	121	34
267	267	150	104	13C2
277	277FQ	110	150	17F12Q2
277	277Q	150	121	6Q6
282	282	126	150	6Q6
283	283C	120C2	150	13C2
283	283Q	150	118Q2	11Q2
283	283QF	150	121	12F5Q2
283	A283	120T2	150	13C2
283	B283	150	118Q2	13C2
283	283	150	120T2	13C2
284	284	150	121	13C2
284	284Q	150	121	11Q2
284	A284	121	150	13C2
285	285	150	35	100
288	288TF	121	150	17F12T2
290	290Q	121	121	46Q2
291	291	71C1A	120T2	100
294	294	150	110	34
294	A294Q	150	120T2	20Q4

SIZE 2 ARINC 600				
# of contacts	INSERT LAYOUT DESIGNATOR	Shell Cavity Insert Position		
		A	B	C
294	294C	150	120T2	24T4
295	295	150	121	24T4
295	295Q	150	121	20Q4
300	300	150	150	DUMMY
300	B300	150	150	EMPTY
301	301	121	121	59
304	A304	120T2	150	34
304	304	150	120T2	34
305	305	150	121	34
306	306	150	150	6T6
310	310	60	150	100
310	310A	150	60	100
312	312F	150	150	12F5C2
313	313C	150	150	13C2
313	313Q	150	150	11Q2
313	A313Q	150	150	11WQ2
313	313	150	150	13C2
317	317TF	150	150	17F12T2
321	321	150	71C1	100
324	324F	150	150	24F4
324	324Q	150	150	20Q4
324	A324Q	150	150	20Q4
324	324	150	150	24T4
325	325Q	118Q2	118Q2	85
327	327	121	121	85
329	329	120T2	150	59
329	A329	150	120T2	59
330	330	150	121	59
334	334	150	150	34
338	338F	150	120F2	68F2
338	338Q	150	118Q2	68Q2
340	340	120T2	120T2	100
342	342	121	121	100
357	357	150	150	57
359	359	150	150	59
368	368Q	150	150	68Q2
370	370	150	120T2	100
371	371A	121	150	100
371	371	150	121	100
385	385	150	150	85
400	400	150	150	100

Contact Amphenol Canada for more information at 416-291-4401 • www.amphenolcanada.com
Download 2D drawings & 3D models using our online configurator.

Insert Layout Designator
Size 3

SIZE 3 ARINC 600							
# OF Contacts	INSERT LAYOUT DESIGNATOR	Shell Cavity Insert Position					
		A	B	C	D	E	F
21	021	4C4	4C4	13C2	EMPTY	EMPTY	-
26	026	EMPTY	EMPTY	13C2	EMPTY	EMPTY	13C2
50	050	4C4	4C4	DUMMY	4C4	4C4	34
56	056Q	11Q11	11Q11	6Q6	11Q11	11Q11	6Q6
66	066Q	11Q11	11Q11	11Q2	11Q11	11Q11	11Q2
70	070	11W11	11W11	13C2	11W11	11W11	13C2
103	103	11W11	11W11	DUMMY	11W11	11W11	59
113	113	EMPTY	EMPTY	100	EMPTY	EMPTY	13C2
113	A113	EMPTY	EMPTY	13C2	EMPTY	EMPTY	100
114	114	EMPTY	EMPTY	EMPTY	EMPTY	EMPTY	EMPTY
121	121	121	DUMMY	EMPTY	DUMMY	DUMMY	EMPTY
137	137A	4C4	120T2	13C2	EMPTY	EMPTY	EMPTY
156	156Q	DUMMY	10T10	25	11Q11	10T10	100
162	162	11W11	11W11	59	11W11	11W11	59
164	164QC	150	4C4	6Q6	BLANK	4C4	BLANK
168	168QC	150	4C4	6Q6	4C4	4C4	BLANK
168	168Q	11Q11	11Q11	100	11Q11	11Q11	20Q4
172	172	6M6	24	12	6M6	24	100
172	172Q	150	BLANK	6Q6	10Q10	BLANK	6Q6
178	178F	4C4	120T2	17F12Q2	4C4	120T2	11Q2
190	190QT	10T10	10T10	6T6	10T10	118Q2	34
192	192	24	24	100	BLANK	10T10	34
207	207Q	11Q11	11Q11	DUMMY	11Q11	150	20Q4
209	209Q	11Q11	11Q11	11Q2	11Q11	150	11Q2
214	214Q	11Q11	11Q11	85	11Q11	11Q11	85
219	219	28T8	28T8	13C2	28T8	DUMMY	DUMMY
222	222	11Q11	DUMMY	100	11Q11	DUMMY	100
222	222CT	6M6	10T10	85	11M3	10T10	100
225	225Q	11Q11	150	62Q2			
231	231	121	10T10	100	EMPTY	EMPTY	EMPTY
242	242CT	8C8	120T2	85	13C5	10T10	6T6
246	246Q	11Q11	11Q11	68Q2	60	60	34
259	259Q	4C4	120T2	DUMMY	4C4	120T2	11Q2
261	261C	4C4	120T2	DUMMY	4C4	120T2	13C2
261	261QC	4C4	120T2	blank	4C4	120T2	11Q2
264	264Q	118Q2	120	EMPTY	EMPTY	EMPTY	EMPTY
268	268C	10C10	10C10	6C6	121	121	blank
269	269M	2C2	2C2	13C2	2C2	150	100
270	270QT	4C4	120T2	11Q2	4C4	120T2	11Q2
271	271C	4C4	4C4	13C2	EMPTY	150	100
271	271M	2C2	2C2	13C2	4C4	150	100
272	272	4C4	4C4	13C2	121	150	100
272	272QT	4C4	120T2	11Q2	4C4	120T2	13C2
272	272CT	8C8	83C3	85	13C5	19C3	64T2
274	274Q	4C4	120T2	11Q2	4C4	120T2	11Q2
274	B274	4C4	120T2	13C2	4C4	120T2	13C2
274	274	4C4	120T2	11Q2	4C4	120T2	11Q2
278	278QF	4C4	118Q2	17F12Q2	4C4	118Q2	13W2
280	280QF	36F36	36F36	11Q2	36F36	150	11Q2
284	284	71C1	71C1	EMPTY	71C1	71C1	EMPTY
293	293QF	11T11	20F12Q8	25	120C2	17C12F5	100
296	296QT	11T11	11T11	11Q2	11T11	150	100
296	A296	24	24	100	24	24	100
307	307Q	110	11Q11	6Q6	24	150	6Q6
308	308	60	60	34	60	60	34
310	310	71C1	71C1	13C2	71C1	71C1	13C2
313	313A	150	DUMMY	13C2	150	DUMMY	DUMMY
322	322Q	150	11Q11	54	11Q11	11Q11	85

Insert Layout Designator

Size 3

SIZE 3 ARINC 600							
# OF Contacts	INSERT LAYOUT DESIGNATOR	Shell Cavity Insert Position					
		A	B	C	D	E	F
326	326	EMPTY	150	13C2	EMPTY	150	13C2
327	327Q	150	11Q11	6C6	30T10	30T10	100
328	328QC	150	11Q11	6C6	150	11Q11	DUMMY
328	328Q	126	150	11Q2	11Q11	11Q11	11Q2
330	330M	2C2	2C2	13C2	150	150	13C2
330	A330	150	150	13C2	2C2	2C2	13C2
333	333	150	10T10	11Q2	150	10T10	DUMMY
360	360	150	150	34	10T10	10T10	6T6
362	362Q	150	150	34	11Q11	10T10	6Q6
362	Q362	11Q11	11Q11	6C6	150	150	34
368	368QF	11Q11	11Q11	100	11QF11	150	85
387	387Q	11Q11	11Q11	6Q6	150	150	59
387	387	24	24	34	150	121	34
394	394QF	36F36	36F36	11Q2	150	150	11Q2
404	404	150	10T10	11Q2	150	11Q11	68Q2
405	405QT	150	11T11	11Q2	150	11Q11	68Q2
410	410	60	10T10	6T6	150	150	34
421	421	4C4	4C4	13C2	150	150	100
422	422	150	28T8	11Q2	150	11Q11	68Q2
428	428QC	150	11Q11	6C6	150	11Q11	100
440	440	60	60	100	60	60	100
444	444	150	121	13C2	150	10T10	DUMMY
450	450	150	150	6W6	121	10T10	13C2
450	450A	150	150	EMPTY	121	EMPTY	13C2
454	454	150	150	DUMMY	121	DUMMY	13C2
454	454Q	126	150	11Q2	150	11Q11	6Q6
460	460	121	DUMMY	59	121	DUMMY	59
468	468	150	71C1	13C2	150	71C1	13C2
470	470	150	EMPTY	85	150	EMPTY	85
476	476	150	150	13C2	EMPTY	150	13C2
486	486	10T10	121	100	121	121	13C2
487	487Q	11Q11	150	13C2	150	150	13C2
490	490F	150	36F	59	150	36F	59
494	494	121	120T2	6T6	121	120T2	6T6
496	496	121	121	6T6	121	121	6T6
502	502	60	24	59	150	150	59
508	508QF	36F36	150	11Q2	150	150	11Q2
510	510	121	121	13C2	121	121	13C2
510	510A	DUMMY	150	100	10T10	150	100
536	536F	150	18T8	100	150	18T8	100
537	537	4C4	120T2	100	150	150	13C2
537	A537	150	150	13C2	4C4	120T2	100
537	537A	121	24	100	121	71C1	100
543	543	121	121	EMPTY	121	121	59
546	546Q	11Q11	150	85	150	150	DUMMY
546	A546Q	11Q11	150	85	150	150	EMPTY
552	552	121	121	34	121	121	34
554	554	121	150	6P6	121	150	6P6
554	554B	121	150	6T6	150	121	6T6
556	556	150	28	100	150	28	100
559	559	10T10	120T2	100	150	120T2	59
570	570QF	150	118Q2	17F12Q2	150	118Q2	13W2
574	574QF	150	118Q2	17F12Q2	150	118Q2	17F12Q2
585	585	150	150	25	150	10T10	100
596	596	121	110	100	121	110	34
600	600	150	150	EMPTY	150	150	EMPTY
602	602	121	121	59	121	121	59
608	608	150	24	100	150	150	34
608	A608	150	150	34	150	24	100
608	B608	120T2	150	34	120T2	150	34

Contact Amphenol Canada for more information at 416-291-4401 • www.amphenolcanada.com
Download 2D drawings & 3D models using our online configurator.

Insert Layout Designator
Size 3

SIZE 3 ARINC 600							
# OF Contacts	INSERT LAYOUT DESIGNATOR	Shell Cavity Insert Position					
		A	B	C	D	E	F
612	612Q	150	150	6Q6	150	150	6Q6
613	613	150	150	DUMMY	150	150	13C2
618	618Q	150	150	100	150	DUMMY	68Q2
619	619Q	150	150	11Q2	150	150	6T6
619	A619Q	150	150	6Q6	150	150	13C2
620	620Q	11Q11	150	59	150	150	100
620	620	150	60	100	150	60	100
626	626	150	150	13C2	150	150	13C2
626	626	150	150	13C2	150	150	13C2
626	626Q	150	150	11Q2	150	150	11Q2
630	630QF	150	150	13C2	150	150	17F12Q2
631	631	10T10	150	100	121	150	100
633	633T	150	150	100	150	24	59
636	636QT	150	150	18T4Q2	150	150	18T4Q2
638	638Q	150	118Q2	34	150	150	34
645	645	121	24	100	150	150	100
646	646QF	150	150	100	11QF11	150	85
646	646Q	11Q11	150	85	150	150	62Q2
648	648	150	150	24	150	150	24
652	652QF	150	150	12F5C2	118Q2	118Q2	100
653	653	150	150	13C2	120T2	120T2	100
664	664QT	150	150	59	150	150	5QT2
665	A665T	150	150	59	150	150	6T6
665	665T	150	150	6T6	150	150	59
668	668	150	150	34	150	150	34
670	670Q	121	150	62Q2	121	150	62Q2
671	671Q	11Q11	150	85	150	150	85
674	674Q	150	150	6Q6	150	150	68Q2
675	675	150	150	16	150	150	59
678	678T	150	150	100	150	28T8	100
680	680	120T2	120T2	100	120T2	120T2	100
693	693	150	150	59	150	150	34
699	699	150	120T2	100	150	120T2	59
700	700	150	150	DUMMY	150	150	100
710	710Q	150	118Q2	85	150	118Q2	85
710	710	150	120T2	85	150	120T2	85
712	712	150	150	12F5C2	150	150	100
713	713	150	150	100	150	150	13C2
713	A713	150	150	13C2	150	150	100
713	713A	150	150	100	150	150	11Q2
718	718	150	150	59	150	150	59
734	734	150	150	100	150	150	34
740	740	150	120T2	100	150	120T2	100
740	740Q	150	150	68Q2	150	150	68Q2
742	742	121	150	100	121	150	100
742	742B	121	150	100	150	121	100
756	756	150	150	100	150	121	85
759	759	150	150	59	150	150	100
767	767	150	150	85	150	150	85
770	770	150	150	85	150	150	85
770	770Q	150	150	100	150	150	68Q2
784	784	150	150	84	150	150	100
785	785	150	150	100	150	150	85
800	800	150	150	100	150	150	100

MOUNTING MODIFIER

PART NUMBER KEY

1. Connector Series	2.Class	3. Shell Style	4. Insert Layout Designator PG 15-21	5. Shell Type	6. Mounting Modifier PG 22-24	7. Polarizing Position PG 25-27	8. Contact Modifier Material	8. Contact Modifier Material
A	D	3	313	3	00	01	OO	A0

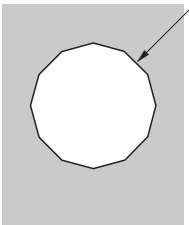

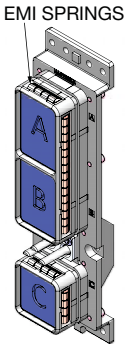

STANDARD **MOUNT**

No. of Thru Holes	Hole Location	Dia. Ø In (mm)	Features	(MOUNTING MODIFIER) PLATING PART NUMBER						
				Chemical Conversion Class 3	Chemical Conversion Class 1A	RoHS Compliant Chemical Conversion	Electroless Nickel	Yellow Cadmium	Olive Drab	Nickel-PTFE/ Durmalon™
		0.148 (3.76)		00	90	R0	89	70	DO	NA
			3 Lugs Removed (SZ 1 REC Only)	02	95	R2	91	72	DB	ND
4	A	0.165 (4.19)		1A	2H	R9	AJ	12	DJ	NK
(MOUNTING MODIFIER) STANDARD MOUNTING WITH EMI SPRINGS (PLUG ONLY)										
ALL	B	0.148 (3.76)	EMI SPRING	20	2J	RA	17	19	DK	NL

MOUNTING **LOCATION FIGURE**

A Corner Holes

B All Holes

C Middle Holes

D Inside & Middle Holes

E Top Corner, Middle & Inside Bottom Holes

F Top & Bottom Row Holes

G Corner & Middle Holes

H Corner & Inside Middle Holes

J Corner & Inside Middle & Middle Holes

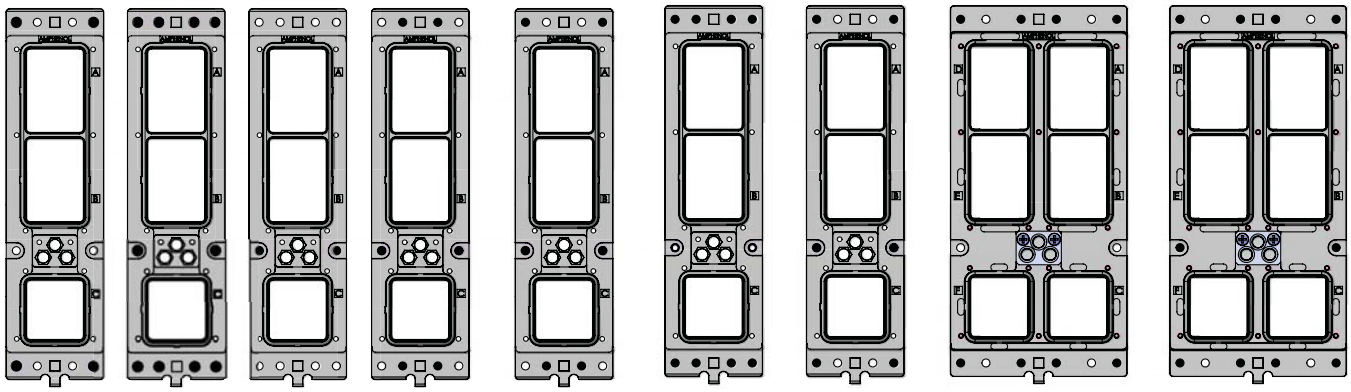

Contact Amphenol Canada for more information at 416-291-4401 • www.amphenolcanada.com
Download 2D drawings & 3D models using our online configurator.

PART NUMBER KEY

1. Connector Series	2.Class	3. Shell Style	4. Insert Layout Designator PG 15-21	5. Shell Type	6. Mounting Modifier PG 22-24	7. Polarizing Position PG 25-27	8. Contact Modifier Material
A	D	3	313	3	00	01	OO

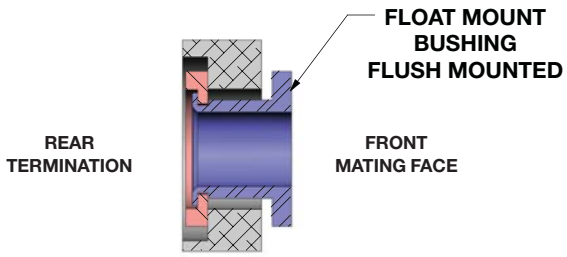

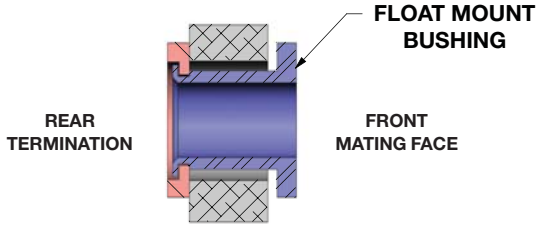

FLOAT **MOUNT**

Shell Sizes	Radial Float MIN In (mm)	No. of Float Mounts	Hole Location	Features	(MOUNTING MODIFIER) PLATING PART NUMBER						
					Chemical Conversion Class 3	Chemical Conversion Class 1A	RoHS Compliant Chemical Conversion	Electroless Nickel	Yellow Cadmium	Olive Drab	Nickel-PTFE/ Durmalon™
ALL	0.048 (1.22) 0.030 (0.76)	4	A		23	2L	RC	AK	7A	DM	NN
2	0.030 (0.76)	8	F		SB	35	M3	C2	8B	E4	P4
3	0.030 (0.76)	12	F		1L	21	RP	AR	B1	D2	N3

FLOAT **MOUNT** WITH EMI SPRINGS (PLUG ONLY)

ALL	0.030 (0.76)	4	A	EMI SPRING	1C	2N	RE	27	7C	DP	NR
2		8	F		1D	2R	RG	92	7E	DS	NT
3		12	F								

MOUNTING **LOCATION FIGURE**

A Corner Holes

B All Holes

C Middle Holes

D Inside & Middle Holes

E Top Corner, Middle & Inside Bottom Holes

F Top & Bottom Row Holes

G Corner & Middle Holes

H Corner & Inside Middle Holes

J Corner & Inside Middle & Middle Holes

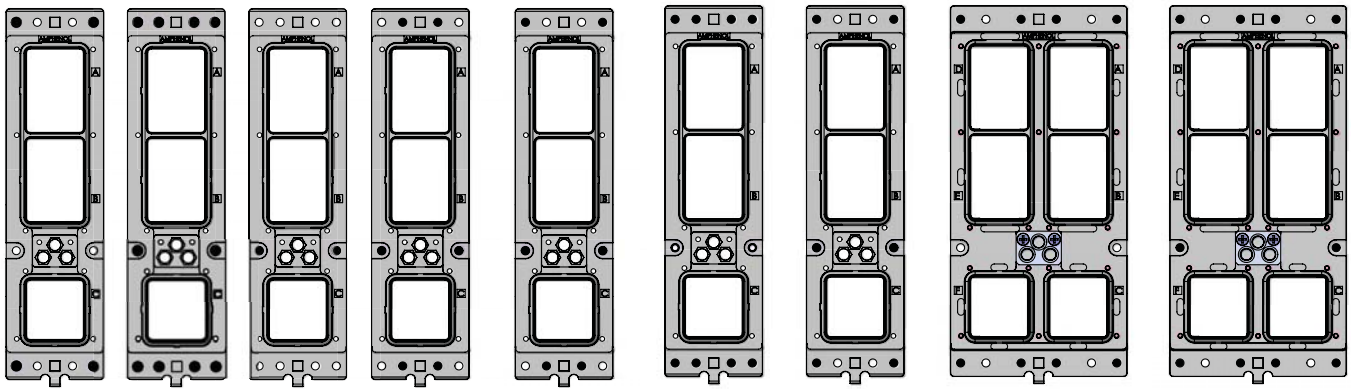

MOUNTING MODIFIER

Clinch Nut with EMI Springs

PART NUMBER KEY

1. Connector Series	2.Class	3. Shell Style	4. Insert Layout Designator PG 15-21	5. Shell Type	6. Mounting Modifier PG 22-24	7. Polarizing Position PG 25-27	8. Contact Modifier Material
A	D	3	313	3	00	01	OO

Front Mating Face

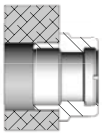

Rear Termination

ARINC 600

CLINCH **NUTS**

Clinch Nut Size	Connector Size	No. of Clinch Nuts: Plug	Hole Location	Receptacle	Hole Location	Features	(MOUNTING MODIFIER) PLATING: Chemical Conversion Class 3	Chemical Conversion Class 1A	RoHS Compliant Chemical Conversion	Electroless Nickel	Yellow Cadmium	Olive Drab	Nickel-PTFE/ Durmalon™
#4-40	1	NA		4	A	3 Lugs Removed (REC Only)	1F	2T	RJ	94	7G	DU	NV
		4	A				03	2B	R3	94	73	DC	NE
	2	2	C	2	C		10	2F	R7	AN	77	DG	NH
		4	A	6	G		03	2B	R3	AG	73	DC	NE
		6	D	6	D		1H	2V	RL	AN	7J	DW	NY
		8	F	8	F		S9	33	M1	AD	7V	E2	P2
		10	B	10	B		08	2D	R5	A9	75	DE	NG
	3	2	C	2	C		10	2F	R7	AB	77	DG	NH
		8	H	10	J		03	2B	R3	AG	73	DC	NE
		12	F	12	F		S9	33	M1	AN	7V	E2	P2
		14	B	14	B		08	2D	R5	A9	75	DE	NG
#6-32	1	NA	NA	4	A	3 Lugs Removed (REC Only)	1E	2S	RH	AB	7F	DT	NU
		4	A				01	2A	R1	93	71	DA	NC
	2	2	C	2	C		11	2G	R8	AA	78	DH	NJ
		4	A	6	G		01	2A	R1	AH	71	DA	NC
		6	E	6	E		04	2C	R4	AA	74	DD	NF
		8	F	8	F		SA	34	M2	AE	8A	E3	P3
		10	B	10	B		09	2E	R6	C1	76	DF	NB
	3	2	C	2	C		11	2G	R8	AC	78	DH	NJ
		8	H	10	J		01	2A	R1	AH	71	DA	NC
		12	F	12	F		SA	34	M2	AA	8A	E3	P3
		14	B	14	B		09	2E	R6	C1	76	DF	NB
M3	1	4	A	4	A		S5	29	RV	AC	7T	D7	N8
	2	4	A	4	A		S5	29	RV	AV	7T	D7	N8
		6	D	6	D		S2	24	RS	AV	7N	D4	N5
		6	G	6	G		S3	28	RU	AS	7R	D6	N7
		10	B	10	B		1N	26	RT	S4	7P	D5	N6
	3	4	A	4	A		S5	29	RV	AT	7T	D7	N8
		6	G	6	G		S3	28	RU	AV	7R	D6	N7
		14	B	14	B		1N	26	RT	S4	7P	D5	N6
CLINCH NUTS WITH EMI SPRINGS (PLUG ONLY)													
#4-40	2	6	G	NA		EMI SPRING	S6	30	RW	AW	7W	D8	N9
		8	F				S7	31	RY	AY	7Y	D9	NZ
	3	6	G				S6	30	RW	AW	7W	D8	N9
#6-32	1	4	A			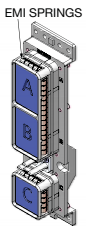	S8	32	RZ	A8	7U	E1	P1
	2	4	A				S8	32	RZ	A8	7U	E1	P1
		6	E				1M	22	RR	S1	7M	D3	N4
		8	F				1P	2M	RF	C3	7B	DN	NG
		10	B				1B	2K	RB	18	79	DL	NM
	3	4	A				S8	32	RZ	A8	7U	E1	P1
		12	F				1P	2M	RF	C3	7B	DN	NG
		14	B				1B	2K	RB	18	79	DL	NM

Contact Amphenol Canada for more information at 416-291-4401 • www.amphenolcanada.com
Download 2D drawings & 3D models using our online configurator.

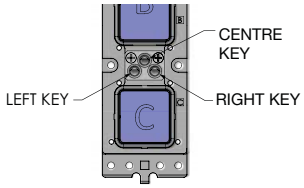

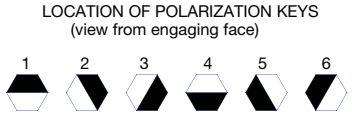

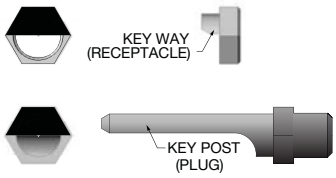

PART NUMBER KEY

1. Connector Series	2.Class	3. Shell Style	4. Insert Layout Designator PG 15-21	5. Shell Type	6. Mounting Modifier PG 22-24	7. Polarizing Position PG 25-27	8. Contact Modifier Material
A	D	3	313	3	00	01	OO

	Receptacle Shell			Plug Shell		
Code Part #	Left Post	Center Post	Right Post	Left Post	Center Post	Right Post
00	-	-	-	-	-	-
01	4	4	4	1	1	1
02	4	4	3	2	1	1
03	4	4	2	3	1	1
04	4	4	1	4	1	1
05	4	4	6	5	1	1
06	4	4	5	6	1	1
07	5	4	4	1	1	6
08	5	4	3	2	1	6
09	5	4	2	3	1	6
10	5	4	1	4	1	6
11	5	4	6	5	1	6
12	5	4	5	6	1	6
13	6	4	4	1	1	5
14	6	4	3	2	1	5
15	6	4	2	3	1	5
16	6	4	1	4	1	5
17	6	4	6	5	1	5
18	6	4	5	6	1	5
19	1	4	4	1	1	4
20	1	4	3	2	1	4
21	1	4	2	3	1	4
22	1	4	1	4	1	4
23	1	4	6	5	1	4
24	1	4	5	6	1	4
25	2	4	4	1	1	3
26	2	4	3	2	1	3
27	2	4	2	3	1	3
28	2	4	1	4	1	3
29	2	4	6	5	1	3
30	2	4	5	6	1	3
31	3	4	4	1	1	2
32	3	4	3	2	1	2
33	3	4	2	3	1	2
34	3	4	1	4	1	2
35	3	4	6	5	1	2
36	3	4	5	6	1	2
37	4	3	4	1	2	1
38	4	3	3	2	2	1
39	4	3	2	3	2	1
40	4	3	1	4	2	1
41	4	3	6	5	2	1
42	4	3	5	6	2	1
43	5	3	4	1	2	6
44	5	3	3	2	2	6
45	5	3	2	3	2	6
46	5	3	1	4	2	6
47	5	3	6	5	2	6
48	5	3	5	6	2	6
49	6	3	4	1	2	5

	Receptacle Shell			Plug Shell		
Code Part #	Left Post	Center Post	Right Post	Left Post	Center Post	Right Post
50	6	3	3	2	2	5
51	6	3	2	3	2	5
52	6	3	1	4	2	5
53	6	3	6	5	2	5
54	6	3	5	6	2	5
55	1	3	4	1	2	4
56	1	3	3	2	2	4
57	1	3	2	3	2	4
58	1	3	1	4	2	4
59	1	3	6	5	2	4
60	1	3	5	6	2	4
61	2	3	4	1	2	3
62	2	3	3	2	2	3
63	2	3	2	3	2	3
64	2	3	1	4	2	3
65	2	3	6	5	2	3
66	2	3	5	6	2	3
67	3	3	4	1	2	2
68	3	3	3	2	2	2
69	3	3	2	3	2	2
70	3	3	1	4	2	2
71	3	3	6	5	2	2
72	3	3	5	6	2	2
73	4	2	4	1	3	1
74	4	2	3	2	3	1
75	4	2	2	3	3	1
76	4	2	1	4	3	1
77	4	2	6	5	3	1
78	4	2	5	6	3	1
79	5	2	4	1	3	6
80	5	2	3	2	3	6
81	5	2	2	3	3	6
82	5	2	1	4	3	6
83	5	2	6	5	3	6
84	5	2	5	6	3	6
85	6	2	4	1	3	5
86	6	2	3	2	3	5
87	6	2	2	3	3	5
88	6	2	1	4	3	5
89	6	2	6	5	3	5
90	6	2	5	6	3	5
91	1	2	4	1	3	4
92	1	2	3	2	2	4
93	1	2	2	3	3	4
94	1	2	1	4	3	4
95	1	2	6	5	3	4
96	1	2	5	6	3	4
97	2	2	4	1	3	3
98	2	2	3	2	3	3
99	2	2	2	3	3	3

The following chart lists the polarizing positions of available keying positions.

See how to order procedure of page 6 and 9 for incorporation these polarizing positions into part numbers.

Polarizing Positions

PART NUMBER KEY

1. Connector Series	2.Class	3. Shell Style	4. Insert Layout Designator PG 15-21	5. Shell Type	6. Mounting Modifier PG 22-24	7. Polarizing Position PG 25-27	8. Contact Modifier Material
A	D	3	313	3	00	A1	OO

The following chart lists the polarizing positions of available keying positions. See how to order procedure of page 6 and 9 for incorporation these polarizing positions into part numbers.

Part Number		Receptacle Shell			Plug Shell		
Code Part #	Refer #	Left Post	Center Post	Right Post	Left Post	Center Post	Right Post
A0	100	2	2	1	4	3	3
A1	101	2	2	6	5	3	3
A2	102	2	2	5	6	3	3
A3	103	3	2	4	1	3	2
A4	104	3	2	3	2	3	2
A5	105	3	2	2	3	3	2
A6	106	3	2	1	4	3	2
A7	107	3	2	6	5	3	2
A8	108	3	2	5	6	3	2
A9	109	4	1	4	1	4	1
B0	110	4	1	3	2	4	1
B1	111	4	1	2	3	4	1
B2	112	4	1	1	4	4	1
B3	113	4	1	6	5	4	1
B4	114	4	1	5	6	4	1
B5	115	5	1	4	1	4	6
B6	116	5	1	3	2	4	6
B7	117	5	1	2	3	4	6
B8	118	5	1	1	4	4	6
B9	119	5	1	6	5	4	6
C0	120	5	1	5	6	4	6
C1	121	6	1	4	1	4	5
C2	122	6	1	3	2	4	5
C3	123	6	1	2	3	4	5
C4	124	6	1	1	4	4	5
C5	125	6	1	6	5	4	5
C6	126	6	1	5	6	4	5
C7	127	1	1	4	1	4	4
C8	128	1	1	3	2	4	4
C9	129	1	1	2	3	4	4
D0	130	1	1	1	4	4	4
D1	131	1	1	6	5	4	4
D2	132	1	1	5	6	4	4
D3	133	2	1	4	1	4	3
D4	134	2	1	3	2	4	3
D5	135	2	1	2	3	4	3
D6	136	2	1	1	4	4	3
D7	137	2	1	6	5	4	3
D8	138	2	1	5	6	4	3
D9	139	3	1	4	1	4	2
E0	140	3	1	3	2	4	2
E1	141	3	1	2	3	4	2
E2	142	3	1	1	4	4	2
E3	143	3	1	6	5	4	2

Part Number		Receptacle Shell			Plug Shell		
Code Part #	Refer #	Left Post	Center Post	Right Post	Left Post	Center Post	Right Post
E4	144	3	1	5	6	4	2
E5	145	4	6	4	1	5	1
E6	146	4	6	3	2	5	1
E7	147	4	6	2	3	5	1
E8	148	4	6	1	4	5	1
E9	149	4	6	6	5	5	1
F0	150	4	6	5	6	5	1
F1	151	5	6	4	1	5	6
F2	152	5	6	3	2	5	6
F3	153	5	6	2	3	5	6
F4	154	5	6	1	4	5	6
F5	155	5	6	6	5	5	6
F6	156	5	6	5	6	5	6
F7	157	6	6	4	1	5	5
F8	158	6	6	3	2	5	5
F9	159	6	6	2	3	5	5
G0	160	6	6	1	4	5	5
G1	161	6	6	6	5	5	5
G2	162	6	6	5	6	5	5
G3	163	1	6	4	1	5	4
G4	164	1	6	3	2	5	4
G5	165	1	6	2	3	5	4
G6	166	1	6	1	4	5	4
G7	167	1	6	6	5	5	4
G8	168	1	6	5	6	5	4
G9	169	2	6	4	1	5	3
H0	170	2	6	3	2	5	3
H1	171	2	6	2	3	5	3
H2	172	2	6	1	4	5	3
H3	173	2	6	6	5	5	3
H4	174	2	6	5	6	5	3
H5	175	3	6	4	1	5	2
H6	176	3	6	3	2	5	2
H7	177	3	6	2	3	5	2
H8	178	3	6	1	4	5	2
H9	179	3	6	6	5	5	2
J0	180	3	6	5	5	5	2
J1	181	4	5	4	1	6	1
J2	182	4	5	3	2	6	1
J3	183	4	5	2	3	6	1
J4	184	4	5	1	4	6	1
J5	185	4	5	6	5	6	1
J6	186	4	5	5	6	6	1
J7	187	5	5	4	1	6	6

Contact Amphenol Canada for more information at 416-291-4401 • www.amphenolcanada.com
Download 2D drawings & 3D models using our online configurator.

PART NUMBER KEY

1. Connector Series	2.Class	3. Shell Style	4. Insert Layout Designator PG 15-21	5. Shell Type	6. Mounting Modifier PG 22-24	7. Polarizing Position PG 25-27	8. Contact Modifier Material
A	D	3	313	3	00	J8	OO

The following chart lists the polarizing positions of available keying positions. See how to order procedure of page 6 and 9 for incorporation these polarizing positions into part numbers.

Part Number		Receptacle Shell			Plug Shell		
Code Part #	Refer #	Left Post	Center Post	Right Post	Left Post	Center Post	Right Post
J8	188	5	5	3	2	6	6
J9	189	5	5	2	3	6	6
K0	190	5	5	1	4	6	6
K1	191	5	5	6	5	6	6
K2	192	5	5	5	6	6	6
K3	193	6	5	4	1	6	5
K4	194	6	5	3	2	6	5
K5	195	6	5	2	3	6	5
K6	196	6	5	1	4	6	5
K7	197	6	5	6	5	6	5
K8	198	6	5	5	6	6	5
K9	199	1	5	4	1	6	4
L0	200	1	5	3	2	6	4
L1	201	1	5	2	3	6	4
L2	202	1	5	1	4	6	4
L3	203	1	5	6	5	6	4
L4	204	1	5	5	6	6	4
L5	205	2	5	4	1	6	3
L6	206	2	5	3	2	6	3
L7	207	2	5	2	3	6	3
L8	208	2	5	1	4	6	3
L9	209	2	5	6	5	6	3
M0	210	2	5	5	6	6	3
M1	211	3	5	4	1	6	2
M2	212	3	5	3	2	6	2
M3	213	3	5	2	3	6	2
M4	214	3	5	1	4	6	2
M5	215	3	5	6	5	6	2
M6	216	3	5	5	6	6	2

Panel Cutout

SIZE 1

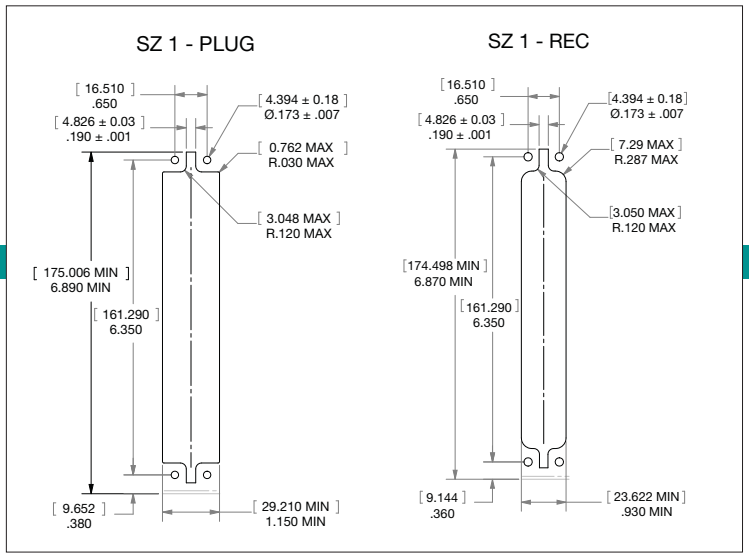

SIZE 2

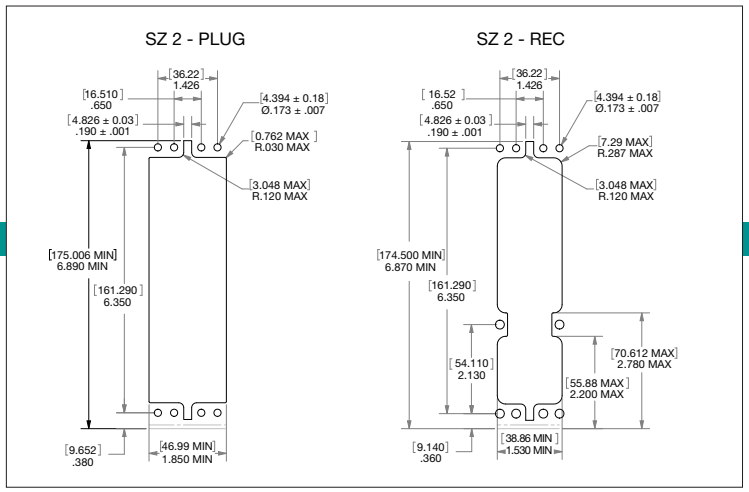

SIZE 3

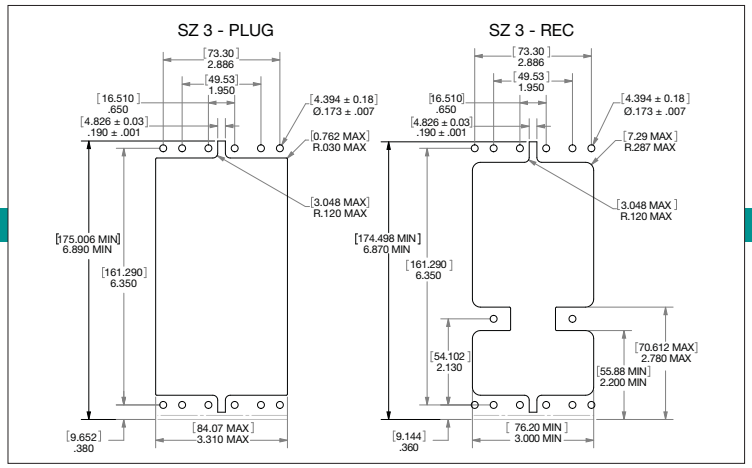

Contact Amphenol Canada for more information at 416-291-4401 • www.amphenolcanada.com
Download 2D drawings & 3D models using our online configurator.

Contacts for Amphenol ARINC 600 Rack and Panel Connectors can be ordered separately. Use part numbers shown in the charts below for ordering contacts and applicable tools. For further information consult Amphenol Canada Corporations

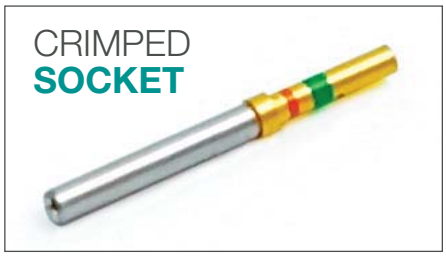

CRIMP **CONTACTS**

CONTACT TYPE	SIZE	RECEPTACLE		Plug		Installation/ Removal Tool	Crimp Tool	Positioner	AWG	MAX Insulation Dia.
		TYPE	PART NO.	TYPE	PART NO.					
Signal	22	SOCKET	AC-782222-301	Pin	AC-772222-301	M81969/1-01	M22520/2-01	M22520/2-23	22, 24 & 26	0.052"
Power	20	Pin	AC-772020-302	Socket	AC-782020-302	M81969/1-02	M22520/2-01	M22520/2-08	20, 22 & 24	0.060"
	16		AC-771616-303		AC-781616-303	M81969/1-03	M22520/1-01	M22520/2-02	16, 18 & 20	0.080"
	12		AC-771212-304		AC-781212-304	M81969/28-02	M22520/1-01	M22520/2-11	12 & 14	0.114"

PCB **TAILS FOR SIGNAL AND POWER**

CONTACT TYPE	SIZE	PCB STD DIA ± .002"	RECEPTACLE		PLUG		PC TAIL EXT "XX"				"Z"	PC TAIL DIP
			Type	Part No.	Type	Part No.	0.250"	0.150"	.375"	0.500"		
SIGNAL	22	0.025"	SOCKET	AC-7822XX-801	PIN	AC-7722XX-Z01	00	02	03	04	G = GOLD S = SOLDER T = TIN	
POWER	20	0.032"	PIN	AC-7720XX-Z01	SOCKET	AC-7820XX	00	02	03	04		
	16	0.050"		AC-7716XX-Z01		AC-7816XX	00	02	03	04		
	12	0.081"		AC-7712XX-Z01		AC-7812XX	00	02	06	04		

Contacts are front release

FILLER **PLUGS**

Contact Cavity Size	Amphenol Part Numbers	Color	EMI Electroless Nickel Plated
22	AC-660022-701	Black	AC-660022-E01
20	AC-660020-701	Red	AC-660020-E01
16	AC-660016-701	Blue	AC-660016-E01
16 Fiber	AC-660016F-701	Blue	AC-660016F-E01
12	AC-660012-701	Yellow	AC-660012-E01
8 Coax	AC-660008-701	Red	AC-660008-E01
5 Coax (Plug)	AC-660005-701	White	AC-660005-E01
5 Coax (Recept.)	AC-660004-701	White	AC-660004-E01

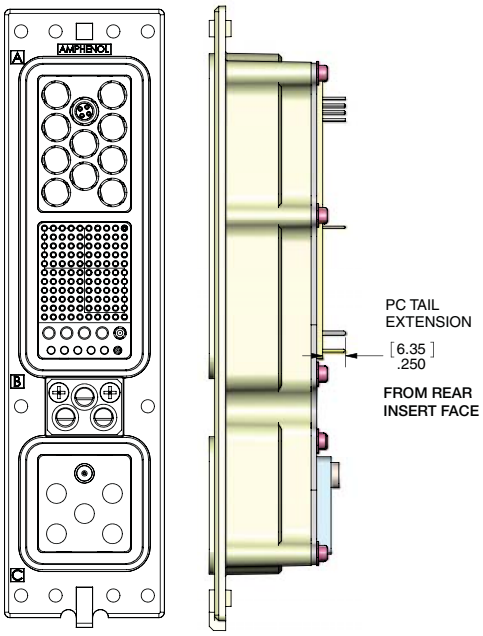

Note: Filler plugs are for non-environmental connectors.

SEALING **PLUGS**

Contact Cavity Size	Amphenol Part Numbers	Color
22	AC-660022-801	Black
20	AC-660020-801	Red
16	AC-660016-801	Blue
12	AC-660012-801	Yellow
8 Coax	AC-660008-8701	Red

Contacts, Protective Covers, Transceivers

FRONT **RELEASE PC TAIL CONTACTS FOR COAX, QUADRAX AND TWINAX**

CONTACT TYPE	SIZE	RECEPTACLE		PLUG		PC TAIL EXT "XX"			
		Type	Part No.	Type	Part No.	0.250"	0.150"	.375"	0.500"
COAX	5	PIN	AC-6C05PP01-XX	SOCKET	AC-6C05SP01-XX	00	02	03	04
	8		AC-6C08PP01-XX		AC-6C08SP01-XX	00	02	03	04
QUADRAX	8		AC-6Q08PP01-XX		AC-6Q08SP01-XX	00	02	03	04
TWINAX	8		AC-6T08PP01-XX		AC-6T08SP01-XX	00	02	06	04

For other contact lengths, please contact the factory or Amphenol Canada.

PROTECTIVE **COVERS**

Conductive covers for ARINC 600 connectors can be ordered from charts below. These covers are designed to protect equipment against the risks of electrostatic discharge, and are made of self-extinguishing polyethylene with graphite filler.

Receptacle Conductive Covers		
Shell Size 1	Combination - Signal and Block Cover AC-200000-911	Signal Block Cover only AC-2000000-911A
		Signal Block Cover only AC-2000000-911C
Shell Size 2 & 3	Combination - Signal and Block Cover AC-200000-912	Signal Block Cover only AC-2000000-912A
		Signal Block Cover only AC-2000000-912C

Plug Conductive Covers		
Shell Size 1	Combination - Signal and Block Cover AC-200000-909	Signal Block Cover only AC-2000000-909A
		Signal Block Cover only AC-2000000-909C
Shell Size 2 & 3	Combination - Signal and Block Cover AC-200000-910	Signal Block Cover only AC-2000000-910A
		Signal Block Cover only AC-2000000-910C

TRANSCEIVERS

PROTOCOL	SIZE	TRANSMITTING PIN	RECEIVING PIN
801	8	AC-6A08PP01-01	AC-6B08PP01-01
ELIO		AC-6A08PP02-01	AC-6B08PP02-01

To order separate waveguides for ARINC 600 Connectors, consult Amphenol Canada Corporation

Contact Amphenol Canada for more information at 416-291-4401 • www.amphenolcanada.com
Download 2D drawings & 3D models using our online configurator.

TYPE	SIZE	RECEPTACLE		PLUG		CABLE TYPE	TECHNICAL NOTES					"X" = BOOT TYPE
		Type	Part No.	Type	Part No.		Inner Crimp	Positioner	Outer	Die	Removal Tool	
RF	1	COAX PIN	AC-6C01PC01-01	Coax Socket	AC-6C01SC01-01	RG214 & RG393	NA	NA	NA	NA	NA	A = Non-Enviro w/Alignment Boot N = Non-Enviro w/o Alignment Boot (NO BOOT) E = Enviro w/ Sealing & Alignment Boot T = Enviro for Tight Spacing w/ Sealing & Alignment Boot B = Enviro for Sealing to the insert w/o Grommet w/ Sealing Boot
	5		AC-6C05PC01-01X		AC-6C05SC01-01X	RG142, RG400	M22520/2-01	"K345 SETTING 8 (RG142) SETTING 6 (RG400)"	M22520/5-01	M22520/5-05	M81969/28-01	
			AC-6C05PC01-02X		AC-6C05SC01-02X	RG58/U		"K345 SETTING 5"	M22520/5-01	"Y586 SETTING B"		
			AC-6C05PC01-03X		AC-6C05SC01-03X	RD174, RG179, RG316		"K345 SETTING 5 or 6"	M22520/5-01	M22520/5-05		
	8		AC-6C08PC01-01X		AC-6C08SC01-01X	RG179	M22520/2-01	"K345 SETTING 7"	M22520/5-01	"M22520/5-05 HEX B (.178 FLATS)"	"M81969/29-2 (or 485-952)"	
	8	Quadrax Pin	AC-6Q08PC01-01X	Quadrax Socket	AC-6Q08SC01-01X	"DRAKA FILICA F4703-3 & F4704-4, NEXANS FILOTEK ABS1503KD24/ ET2PF870"	M22520/2-01	"K709 SETTING 5"	M22520/5-01	"M22520/5-45 SETTING B"	485-952	
			AC-6Q08PC01-02X		AC-6Q08SC01-02X	TENSOLITE NF24Q100, 24443/03130X-4(LD), 24443/9P025X-4(LD), BOEING S280W502-4						
			AC-6Q08PC01-03X		AC-6Q08SC01-03X	"TENSOLITE 26743102006X-4(LD) or GORE RCN8328"				"M22520/5-45 SETTING A"		
	8	Twinax Pin	AC-6T08PC01-01X	Twinax Socket	AC-6T08SC01-01X	TENSOLITE 24463/9P025X-2(LD)	AFM-2	"K1168 SETTING 6"	M22520/5-01	"Y586 SETTING B"	M81969/28-03	
			AC-6T08PC01-02X		AC-6T08SC01-02X	GORE GSC-12-2548-00						
			AC-6T08PC01-03X		AC-6T08SC01-03X	GRUMMAN GC875TM24H						

Backshell
How to Order

1. Connector Series	2. Backshell	3. Shell Style	4. Backshell Style	5. Plating	6. Customer Number
600	B	4	B	1	000

1. CONNECTOR SERIES	
600	ARINC 600
404	ARINC 404
R39	
R27	

2. BACK SHELL	
B	Backshell

3. SHELL STYLE	
4	Size

4. BACKSHELL STYLE	
A	Split, Saddle Clamp
B	Split, EMI
C	One Piece, Sealed, EMI
D	One Piece, Saddle Clamp

5. PLATING	
1	Electroless Nickel
2	OD Chromate
3	Tin
4	Gold
5	Zinc Nickel
6	Yellow CAD
7	Chem Film
8	Nickel Fluorocarbon Polymer (Durmalon)

6. CUSTOMER NUMBER	
000	Customer Number

Contact Amphenol Canada for more information at 416-291-4401 • www.amphenolcanada.com
Download 2D drawings & 3D models using our online configurator.