REVISIONS		
LTR	DESCRIPTION	DATE
A	INITIAL RELEASE	03/26/20

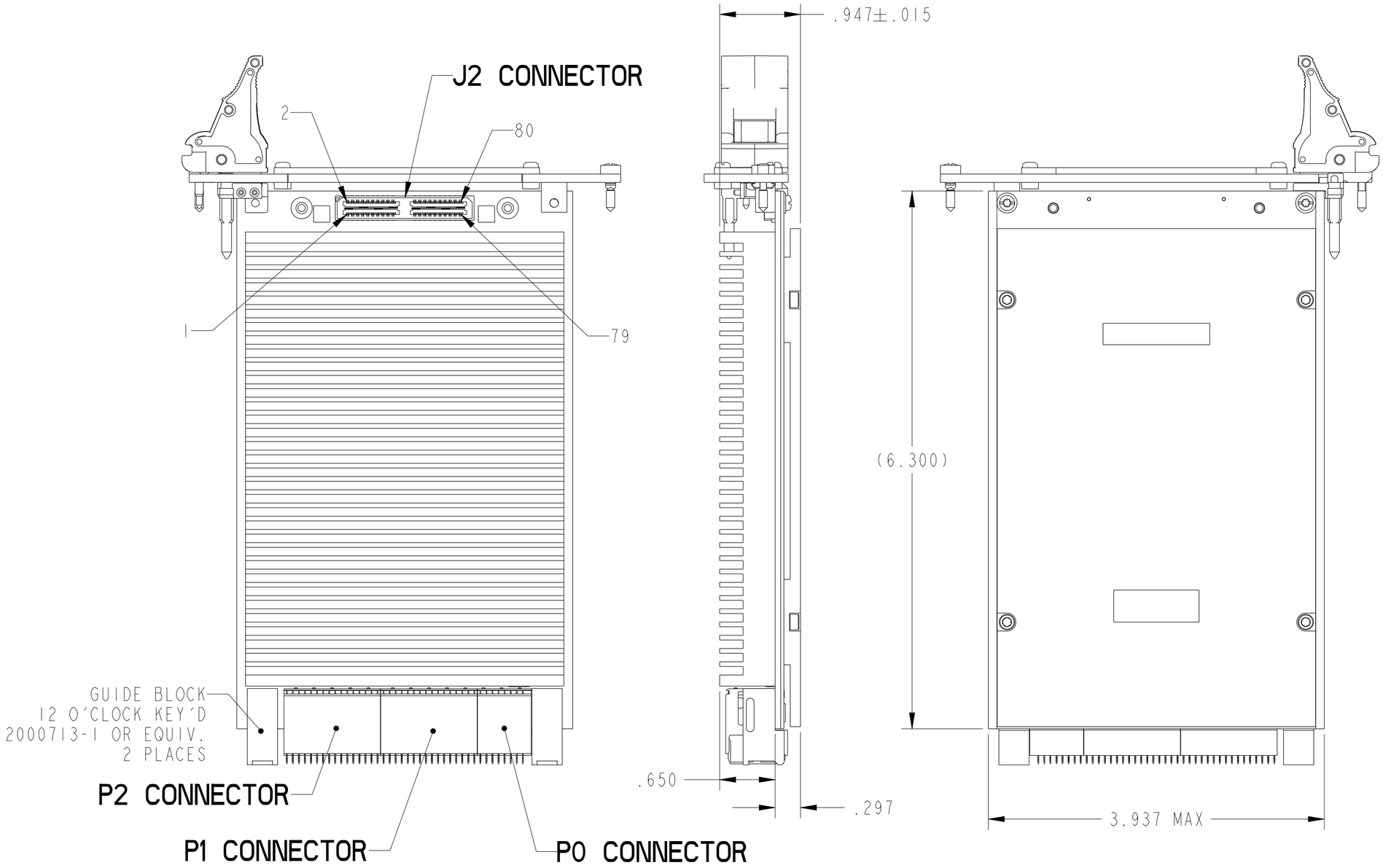

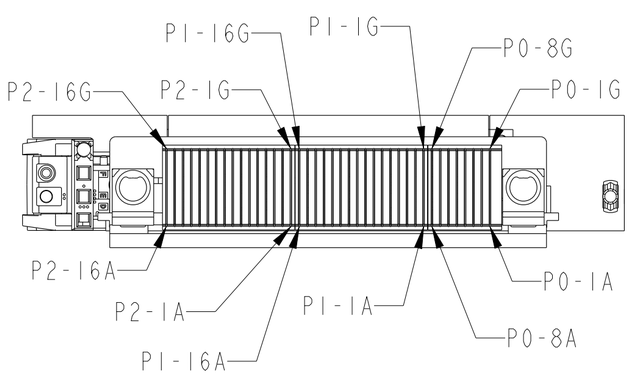

SEE SHEET 3

NOTES:

THE USE OF THIS DOCUMENT IS UNLIMITED.
HOWEVER, DOCUMENTS REFERENCED HEREON
MAY CONTAIN LIMITED RIGHTS DATA.

RELEASED / Mar. 31 2020, 2:11:48 PM

NONE

NEXT ASSEMBLY

PRO/ENGINEER INFORMATION
Pro/e Model Used:
CF-020400-027.ASSEM
Drawing Name:
CF-020400-027

UNLESS OTHERWISE SPECIFIED
LINEAR DIMENSIONS ARE IN INCHES
TOLERANCES:
.XXXX = ±.0005 ANGLES= ±2°
.XXX = ±.010
.XX = ±.03
.X = ±.1
DIM.& TOL. PER ASME Y14.5M;
DRM PER MIL-STD-31000;
OTHER Amphenol Stds. PER 9-3800
LEGENDS:
=FLAG NOTE CALL OUT
REFERENCE ONLY

SPECIFICATIONS
MATERIAL SPEC.
NONE
PROCESS SPEC.
9-9172-3

POS	QTY	PART NUMBER	DESCRIPTION	NOTE

PARTS LIST

APPROVALS		DATE
PREPARED BY	W. LEE	26-Mar-20
ENGINEER IN CHARGE	W. LEE	
DESIGN MANAGER	J. ROTHROCK	
DESIGN ACTIVITY GROUP	C1	

THIRD ANGLE PROJECTION

AMPHENOL CORPORATION
40-60 DELAWARE AVENUE
SIDNEY, N.Y. 13838

3U VPX SWITCH
CONVECTION COOLING

SIZE	CAGE CODE	DOCUMENT NO.	REV.
C	77820	CF-020400-027	A

SCALE: 1.0 | REF. CF-020400-026 | SHEET 1 OF 3

DOCUMENT NO. CF-020400-027 | SHEET 1 OF 3 | REV. A

FORMAT: C-U.E-1

Eng PDM Information For Reference Only
REVISION A
VERSION 2

DOCUMENT NO. CF-020400-027 | SHEET 1 OF 3 | REV. A

P0 I/O CHART

	G	F	E	D	C	B	A
1	+12V	+12V	+12V	NC	+3.3V	+3.3V	+3.3V
2	+12V	+12V	+12V	NC	+3.3V	+3.3V	+3.3V
3	+5V	+5V	+5V	NC	+5V	+5V	+5V
4	NC	NC	GND	NC	GND	SYSRST#	NC
5	NC	NC	GND	NC	GND	NC	NC
6	NC	NC	GND	NC	GND	NC	NC
7	SWITCH JTAG_TCLK(NC)	GND	SWITCH JTAG_TDO(NC)	SWITCH JTAG_TDI(NC)	GND	SWITCH JTAG_TMS(NC)	NC
8	GND	NC	NC	GND	NC	NC	GND

P1 I/O CHART

	G	F	E	D	C	B	A
1	SWITCH_USB_D+	GND	P1_10G-KR_TX#	P1_10G-KR_TX	GND	P1_10G-KR_RX#	P1_10G-KR_RX
2	GND	P2_10G-KR_TX#	P2_10G-KR_TX	GND	P2_10G-KR_RX#	P2_10G-KR_RX	GND
3	SWITCH_USB_D-	GND	P3_10G-KR_TX#	P3_10G-KR_TX	GND	P3_10G-KR_RX#	P3_10G-KR_RX
4	GND	P4_10G-KR_TX#	P4_10G-KR_TX	GND	P4_10G-KR_RX#	P4_10G-KR_RX	GND
5	SWITCH_XSMI_MDIO	GND	P5_10G-KR_TX#	P5_10G-KR_TX	GND	P5_10G-KR_RX#	P5_10G-KR_RX
6	GND	P6_10G-KR_TX#	P6_10G-KR_TX	GND	P6_10G-KR_RX#	P6_10G-KR_RX	GND
7	SWITCH_XSMI_MDC	GND	P7_10G-KR_TX#	P7_10G-KR_TX	GND	P7_10G-KR_RX#	P7_10G-KR_RX
8	GND	P8_10G-KR_TX#	P8_10G-KR_TX	GND	P8_10G-KR_RX#	P8_10G-KR_RX	GND
9	SWITCH_I2C_SDA	GND	P9_10G-KR_TX#	P9_10G-KR_TX	GND	P9_10G-KR_RX#	P9_10G-KR_RX
10	GND	P10_10G-KR_TX#	P10_10G-KR_TX	GND	P10_10G-KR_RX#	P10_10G-KR_RX	GND
11	SWITCH_I2C_SCL	GND	P11_10G-KR_TX#	P11_10G-KR_TX	GND	P11_10G-KR_RX#	P11_10G-KR_RX
12	GND	P12_10G-KR_TX#	P12_10G-KR_TX	GND	P12_10G-KR_RX#	P12_10G-KR_RX	GND
13	CPU_USB_D+	GND	P13_10G-KR_TX#	P13_10G-KR_TX	GND	P13_10G-KR_RX#	P13_10G-KR_RX
14	GND	P14_10G-KR_TX#	P14_10G-KR_TX	GND	P14_10G-KR_RX#	P14_10G-KR_RX	GND
15	CPU_USB_D-	GND	P15_10G-KR_TX#	P15_10G-KR_TX	GND	P15_10G-KR_RX#	P15_10G-KR_RX
16	GND	P16_10G-KR_TX#	P16_10G-KR_TX	GND	P16_10G-KR_RX#	P16_10G-KR_RX	GND

J2 I/O CHART

ID	SIGNAL	ID	SIGNAL	ID	SIGNAL	ID	SIGNAL
1	P25_10G-KR_TX	2	P25_10G-KR_RX	41	P5_10G-T_DA+	42	P5_10G-T_DB+
3	P25_10G-KR_TX#	4	P25_10G-KR_RX#	43	P5_10G-T_DA-	44	P5_10G-T_DB-
5	P26_10G-KR_TX	6	P26_10G-KR_RX	45	P5_10G-T_DC+	46	P5_10G-T_DD+
7	P26_10G-KR_TX#	8	P26_10G-KR_RX#	47	P5_10G-T_DC-	48	P5_10G-T_DD-
9	+5V	10	GND	49	+5V	50	GND
11	+5V	12	GND	51	+5V	52	GND
13	P27_10G-KR_TX	14	P27_10G-KR_RX	53	P6_10G-T_DA+	54	P6_10G-T_DB+
15	P27_10G-KR_TX#	16	P27_10G-KR_RX#	55	P6_10G-T_DA-	56	P6_10G-T_DB-
17	P28_10G-KR_TX	18	P28_10G-KR_RX	57	P6_10G-T_DC+	58	P6_10G-T_DD+
19	P28_10G-KR_TX#	20	P28_10G-KR_RX#	59	P6_10G-T_DC-	60	P6_10G-T_DD-
21	P29_10G-KR_TX	22	P29_10G-KR_RX	61	P7_10G-T_DA+	62	P7_10G-T_DB+
23	P29_10G-KR_TX#	24	P29_10G-KR_RX#	63	P7_10G-T_DA-	64	P7_10G-T_DB-
25	P30_10G-KR_TX	26	P30_10G-KR_RX	65	P7_10G-T_DC+	66	P7_10G-T_DD+
27	P30_10G-KR_TX#	28	P30_10G-KR_RX#	67	P7_10G-T_DC-	68	P7_10G-T_DD-
29	+3.3V	30	GND	69	+3.3V	70	GND
31	+3.3V	32	GND	71	+3.3V	72	GND
33	P31_10G-KR_TX	34	P31_10G-KR_RX	73	P8_10G-T_DA+	74	P8_10G-T_DB+
35	P31_10G-KR_TX#	36	P31_10G-KR_RX#	75	P8_10G-T_DA-	76	P8_10G-T_DB-
37	P32_10G-KR_TX	38	P32_10G-KR_RX	77	P8_10G-T_DC+	78	P8_10G-T_DD+
39	P32_10G-KR_TX#	40	P32_10G-KR_RX#	79	P8_10G-T_DC-	80	P8_10G-T_DD-
G1	GND	G2	GND	G5	GND	G6	GND
G3	GND	G4	GND	G7	GND	G8	GND

P2 I/IO CHART

	G	F	E	D	C	B	A
1	CPU_DEBUG_1G-T_DA	GND	P17_10G-KR_TX#	P17_10G-KR_TX	GND	P17_10G-KR_RX#	P17_10G-KR_RX
2	GND	P18_10G-KR_TX#	P18_10G-KR_TX	GND	P18_10G-KR_RX#	P18_10G-KR_RX	GND
3	CPU_DEBUG_1G-T_DA#	GND	P19_10G-KR_TX#	P19_10G-KR_TX	GND	P19_10G-KR_RX#	P19_10G-KR_RX
4	GND	P20_10G-KR_TX#	P20_10G-KR_TX	GND	P20_10G-KR_RX#	P20_10G-KR_RX	GND
5	CPU_DEBUG_1G-T_DB	GND	P21_10G-KR_TX#	P21_10G-KR_TX	GND	P21_10G-KR_RX#	P21_10G-KR_RX
6	GND	P22_10G-KR_TX#	P22_10G-KR_TX	GND	P22_10G-KR_RX#	P22_10G-KR_RX	GND
7	CPU_DEBUG_1G-T_DB#	GND	P23_10G-KR_TX#	P23_10G-KR_TX	GND	P23_10G-KR_RX#	P23_10G-KR_RX
8	GND	P24_10G-KR_TX#	P24_10G-KR_TX	GND	P24_10G-KR_RX#	P24_10G-KR_RX	GND
9	CPU_DEBUG_1G-T_DC	GND	P1_10G-T_DB-	P1_10G-T_DB+	GND	P1_10G-T_DA-	P1_10G-T_DA+
10	GND	P1_10G-T_DD-	P1_10G-T_DD+	GND	P1_10G-T_DC-	P1_10G-T_DC+	GND
11	CPU_DEBUG_1G-T_DC#	GND	P2_10G-T_DB-	P2_10G-T_DB+	GND	P2_10G-T_DA-	P2_10G-T_DA+
12	GND	P2_10G-T_DD-	P2_10G-T_DD+	GND	P2_10G-T_DC-	P2_10G-T_DC+	GND
13	CPU_DEBUG_1G-T_DD	GND	P3_10G-T_DB-	P3_10G-T_DB+	GND	P3_10G-T_DA-	P3_10G-T_DA+
14	GND	P3_10G-T_DD-	P3_10G-T_DD+	GND	P3_10G-T_DC-	P3_10G-T_DC+	GND
15	CPU_DEBUG_1G-T_DD#	GND	P4_10G-T_DB-	P4_10G-T_DB+	GND	P4_10G-T_DA-	P4_10G-T_DA+
16	GND	P4_10G-T_DD-	P4_10G-T_DD+	GND	P4_10G-T_DC-	P4_10G-T_DC+	GND

SEE SHEET 3

NOTES:

RELEASED / Mar. 31 2020, 2:11:49 PM

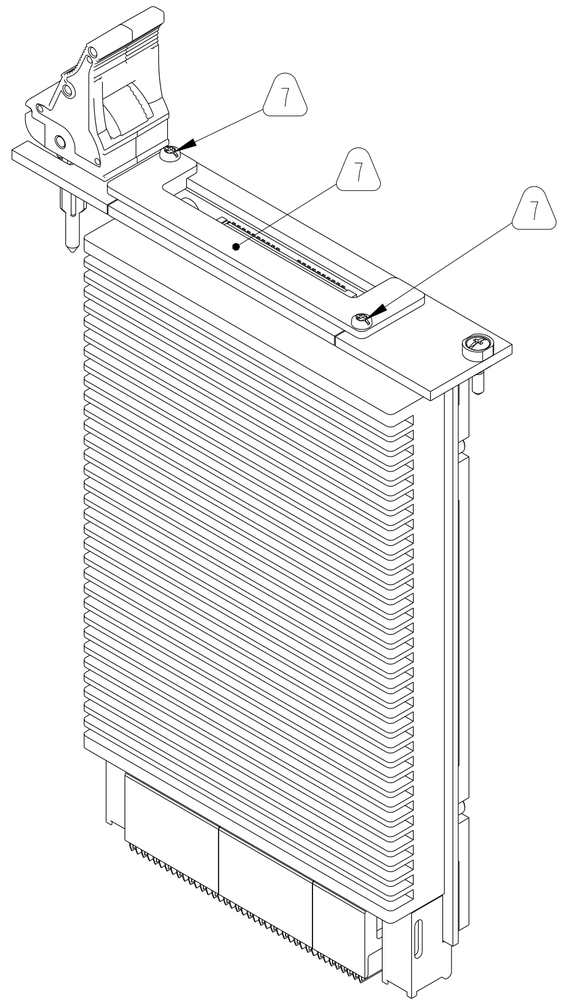

TOP ISOMETRIC VIEW
SCALE 1.000

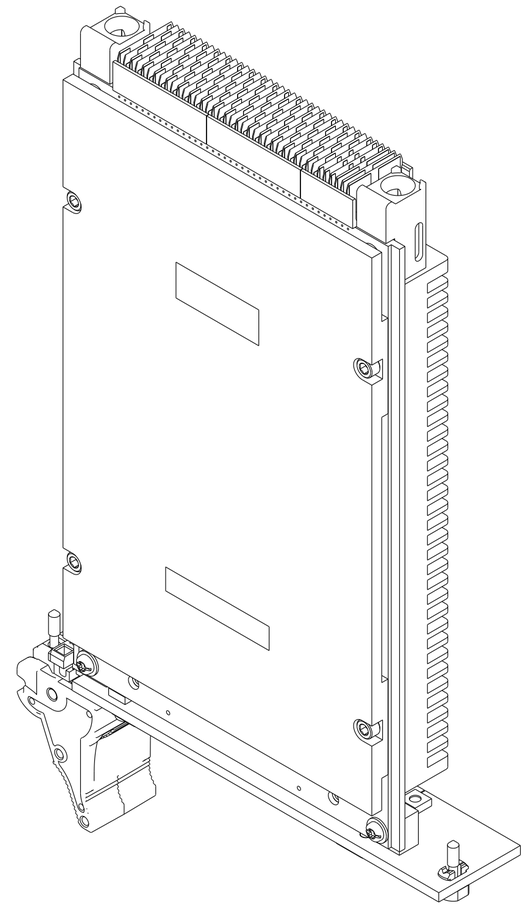

BOTTOM ISOMETRIC VIEW
SCALE 1.000

7. FRONT PANEL COVER IS SHOWN ASSEMBLED FOR REFERENCE ONLY AND SHALL BE SHIPPED UNASSEMBLED IN A SEPARATE BAG WITH 2 PCS OF M2.5 SCREWS.

6. J2 CONNECTOR MATING CABLE:
SAMTEC HQDP-040-( )-TTR-( )-( )-( )
(PARENTHESIS TO BE FILLED PER SAMTEC HQDP DATASHEET FOR DESIRED TYPE)

5. OPERATING TEMPERATURE: -30°C TO +50°C

4. MARKING ON LABEL MAY DIFFER FROM DRAWING BASED ON CUSTOMER SPECIFIC ORDER REQUIREMENTS.

3. MARK LABEL WITH "AMPHENOL", PART NUMBER, AND SEVEN DIGIT SERIAL NUMBER AND ATTACH ON INDICATED SURFACE. SERIAL NUMBER PER 9-9172-3.

EXAMPLE: FOR ASSEMBLY NUMBER 7 BUILT ON MAY 20 (WEEK 21), 2020
AMPHENOL
CF-020400-027
2021007

2. PACKAGE PER PRODUCTION PROCESS SHEET.

1. ASSEMBLY CONTAINS ELECTROSTATIC DISCHARGE (ESD) SENSITIVE COMPONENTS. ASSEMBLY SHALL BE HANDLED, PACKAGED, AND SHIPPED TO MEET REQUIREMENTS OF ANSI/ESD-S-20.20 AND IPC-A-610.

NOTES:

RELEASED / Mar. 31 2020, 2:11:49 PM

SIZE	CAGE CODE	DOCUMENT NO.	REV.
C	77820	CF-020400-027	A
SCALE: 1.0	REF: CF-020400-026	SHEET 3 OF 3	

DOCUMENT NO. CF-020400-027 | SHEET 3 OF 3 | REV. A

Eng PDM Information For Reference Only | REVISION A | VERSION 2

FORMAT: C-U.E-1