Amphenol®

鉄道用 M12 シリーズ

M12 Railway

M12

Snap On & Screw Connectors

http://www.amphenol.co.jp/industrial/

スナップオン
嵌合

Snap on M12シリーズ(鉄道用)

- プッシュプルで着脱
- 伝送速度：100Mbps (D-code)、10Gbps (X-code)
- 適合規格：EN45545-2(R22 HL3)、IEC 61076
- A-code(5芯)、D-code(4芯)、X-code(8芯)
- 360° EMIシールド 対応

製品仕様

- 定格電流：4A(A-code、D-code)、0.5 A (X-code)
- 定格電圧：60V(A-code、D-code)、32V(X-code)
- 保護等級：IP65、IP67
- 嵌合耐久性：500回

SNAP ON M12

特許取得の独自の嵌合構造

簡単確実な嵌合で、作業工数を大幅削減

ねじ式嵌合

M12シリーズ(鉄道用)

- 高耐久、耐振動のM12コネクタ
- 伝送速度：100Mbps (D-code)、10Gbps (X-code)
- 適合規格：EN45545-2(R22 HL3)、IEC 61076
- A-code(3,4,5,8芯)、D-code(4芯)、X-code(8芯)
- 360° EMIシールド 対応

製品仕様

- 定格電流： 2A(A-code)
  4 A (A-code、D-code)
  0.5A(X-code)
- 定格電圧：30V、48V、60V、250V
- 保護等級：IP67
- 嵌合耐久性：100回

TABLE OF CONTENT

HOW TO ORDER 4

SNAP ON M12 5

A-CODE 6

D-CODE 9

X-CODE 12

SCREW M12

A-CODE 15

D-CODE 20

X-CODE 27

CONTACTS 30

CRIMPING TOOL 32

HOW TO ORDER

ASM12	PP	E	A	04	M	S	C	D	09	M	LC

Connector type:
PP: Snap on
Omit: Thread

Product shape:
E: Right angle
Omit: Straight

Coding:
A: A-coding
D: D-codng
X: X-coding

Insert arrangement:
03: 3-pin
04: 4-pin
05: 5-pin
08: 8-pin

Product type:
M: Male plug
F: Female socket

Contact type:
P: Pin
S: Socket

Contact wire type:
C: Crimp
W: Solder
T: PCB

Backshell type:
D: Cable clamp
RA: Right-angle PCB footprint
Omit: Without backshell

Wire range:
09: Ø 6.5 to 9.0mm
Omit: Ø 4.5 to 8.0mm

Mounting type:
M: Jam nut receptacle
Omit: Cable mounted receptacle

With or without contacts:
LC: Contacts have to be purchased separately
Omit: Contacts are included (for more information and details, please contact us)

PRODUCT INTRODUCTION

M12 Snap On connector series has been designed for railway signal transmission (EN45545).

Crimping contacts and inserting the rubber case are both easy and convenient.

Quick connection.
360° shielding.
Fire protection acc. to EN45545-2.
Suitable for harsh environments.

CONNECTOR TYPE	
Snap On Connector	
APPLICATIONS	
Audiovisual communication Passenger information Video Surveillance Passenger entertainment and WiFi Passenger information display Ticket vending machine	
ELECTRICAL	
Insulator resistance	100MΩ Min
Transmission rate	A CODE: 100 Mbits/s Max D CODE: 100 Mbits/s Max X CODE: 10G Mbits/s Max
Shielding	360° shielded
MECHANICAL	
Operating Temperature	-25°C to 85°C
IP-Class	IP65, IP67
Durability	500 cycles
MATERIAL	
Sheath material	(EN45545) Elastomer, electron beam cross-linked
STANDARD	
IEC61076-2-101	

SNAP ON M12
A-CODE

PLUG

The following connector doesn't include contacts. Please order them separately (ref: P.30).

No. PIN	CODING	FRONT VIEW	CURRENT	VOLTAGE	CONTACT SIZE
5PIN	A	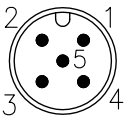	4A	60V	#20

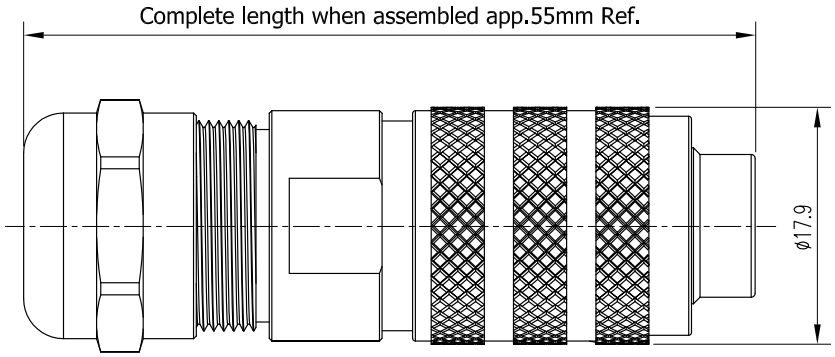

Contact face based on
IEC 61076-2-101

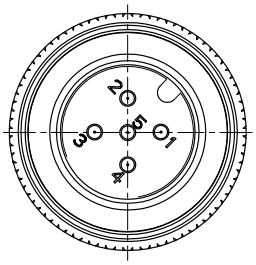

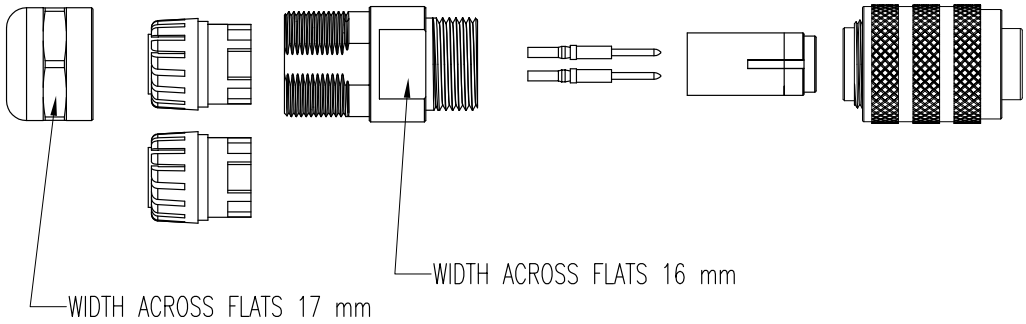

RECEPTACLE **P/N:** AS-M12-F-SB-LC

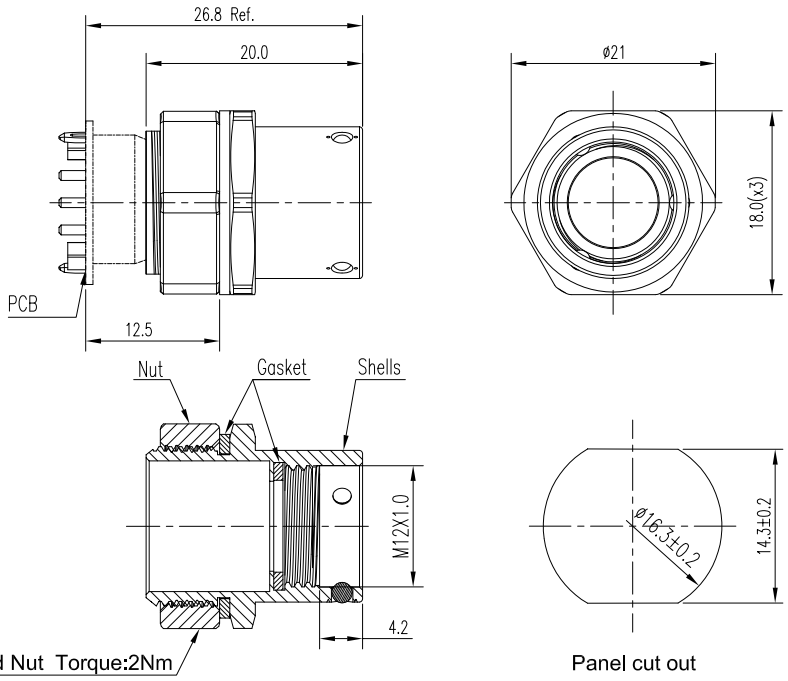

RECEPTACLE INSERT (COMPONENT)

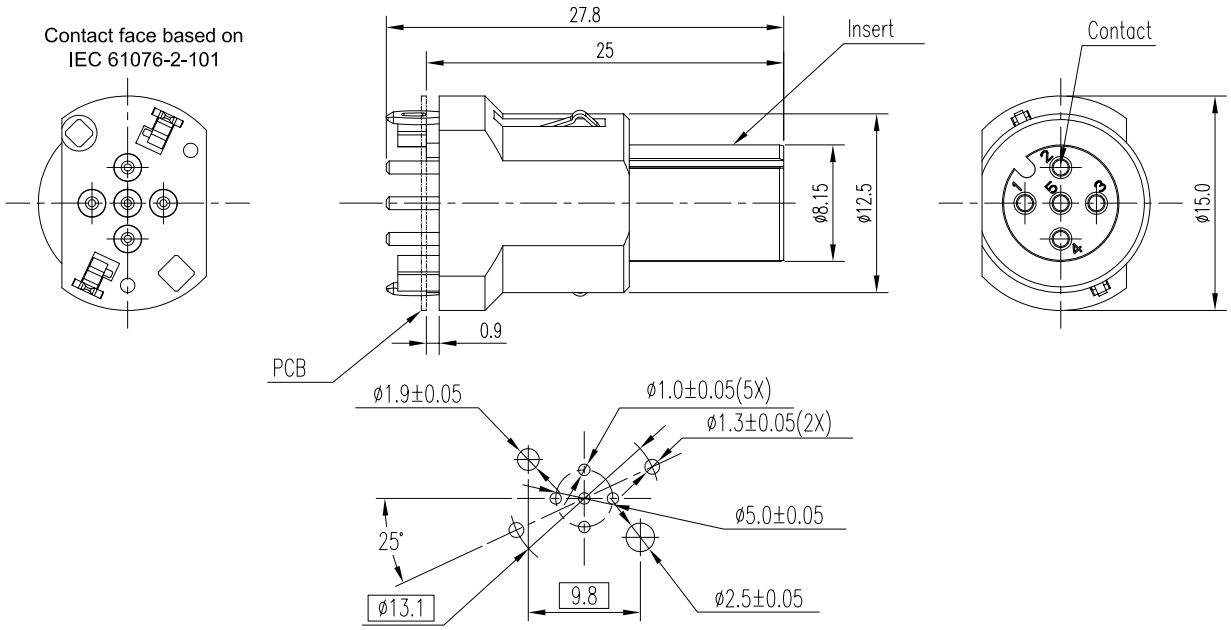

PCB LAYOUT REFERENCE

SNAP ON M12 A-CODE

PCB PANEL RECEPTACLE **P/N:** AS-M12PP-A05-F-ST-RA-E

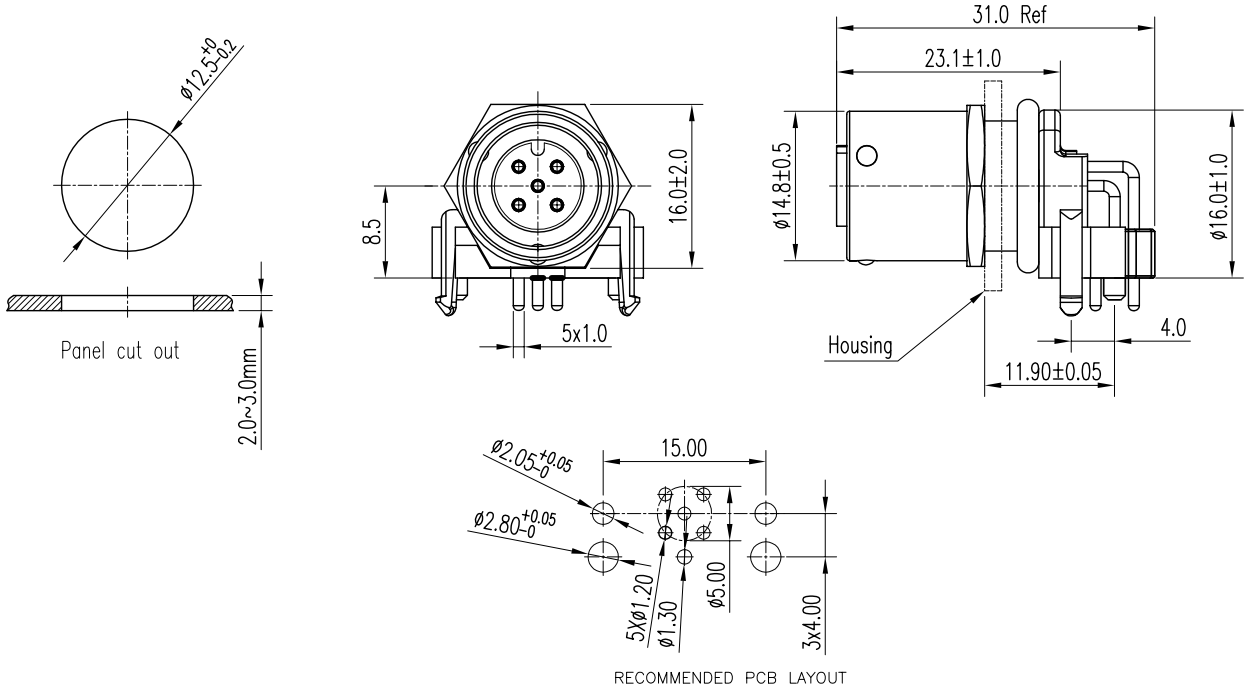

PLUG

The following connector doesn't include contacts. Please order them separately (ref: P.31).

No. PIN	CODING	FRONT VIEW	CURRENT	VOLTAGE	CONTACT SIZE
4PIN	D	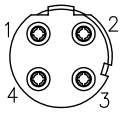	4A	250V	#20

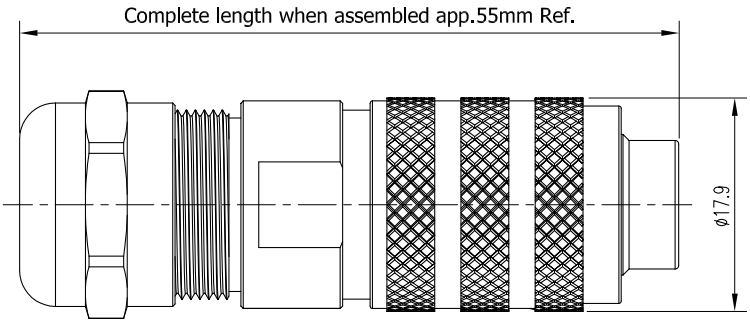

Contact face based on
IEC 61076-2-101

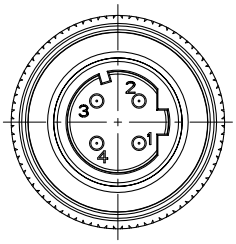

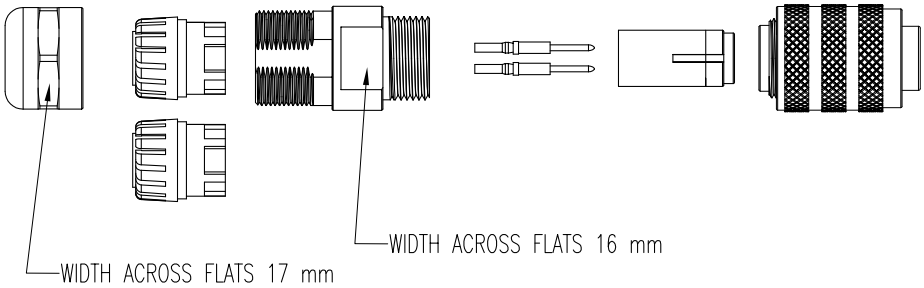

RECEPTACLE **P/N:** AS-M12-F-SB-LC

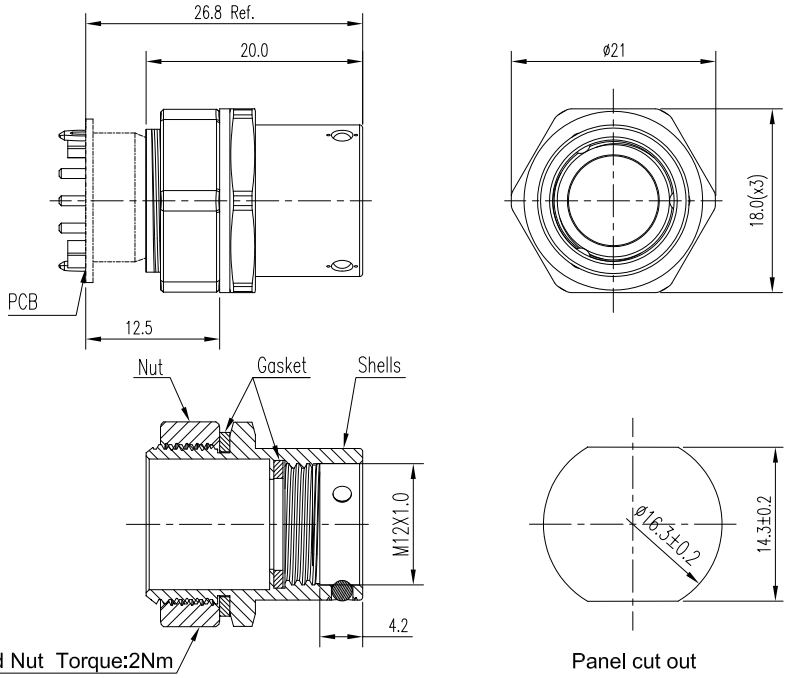

RECEPTACLE INSERT (COMPONENT)

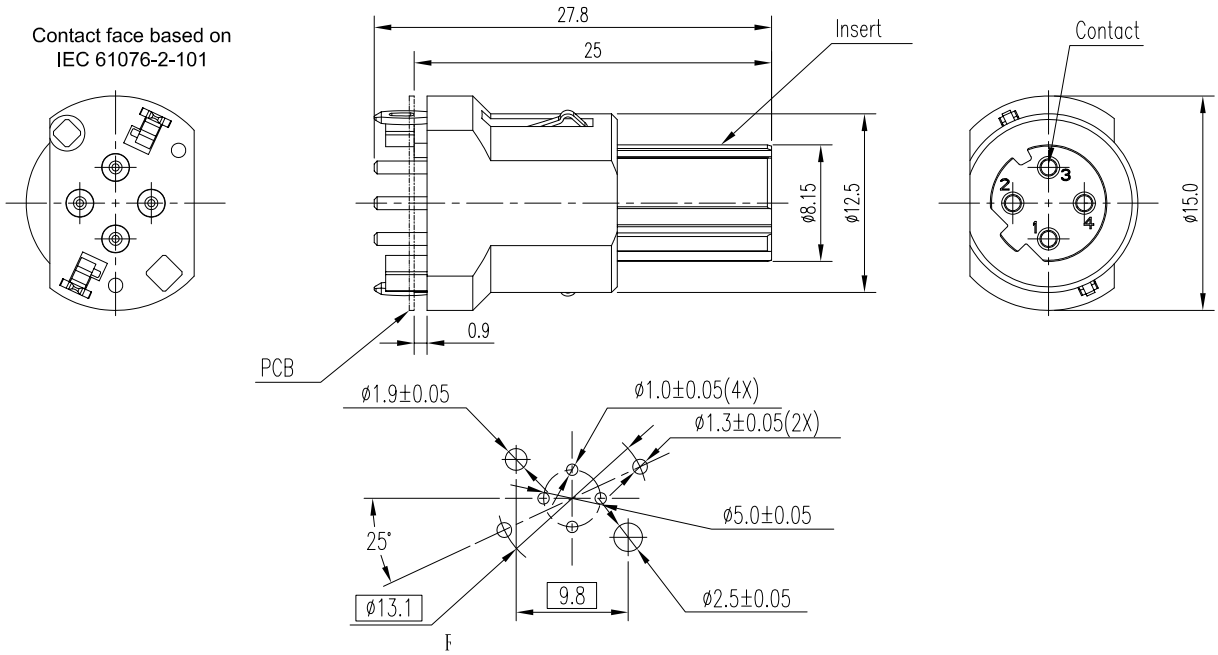

PCB LAYOUT REFERENCE

PCB PANEL RECEPTACLE **P/N:** AS-M12PP-D05-F-ST-RA-E

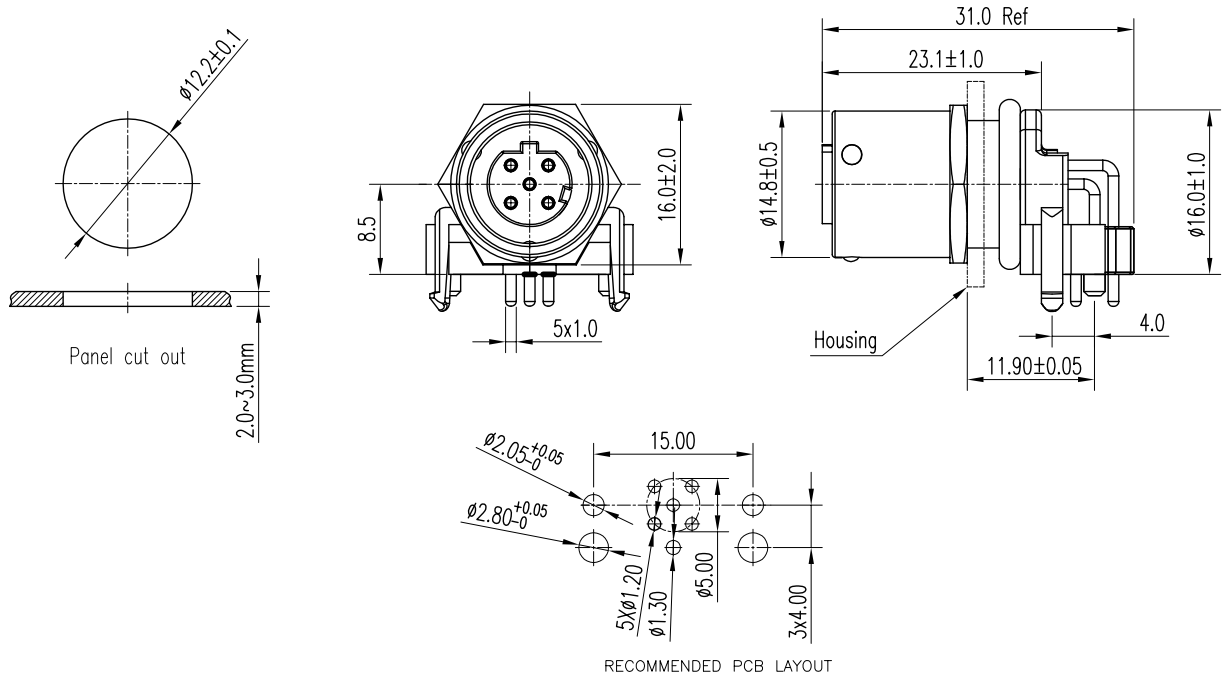

SNAP ON M12
X-CODE

PLUG

The following connector doesn't include contacts. Please order them separately (ref: P.31).

No. PIN	CODING	FRONT VIEW	CURRENT	VOLTAGE	CONTACT SIZE
8PIN	X		0.5A	32V	#24

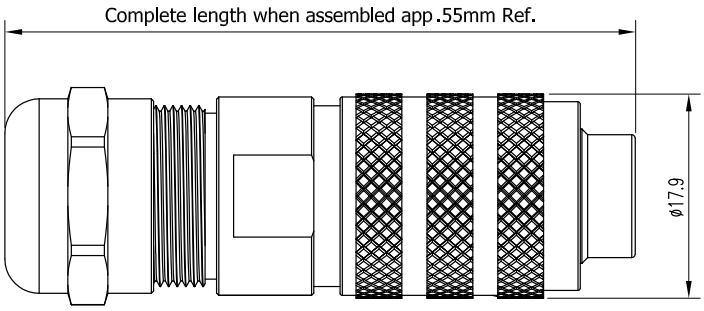

Contact face based on
IEC 61076-2-109

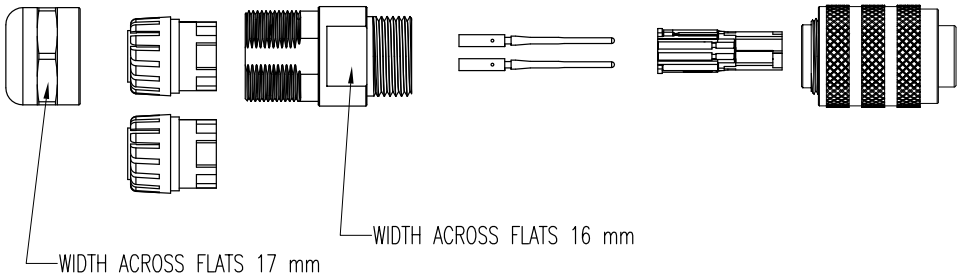

RECEPTACLE **P/N:** AS-M12-F-SB-LC

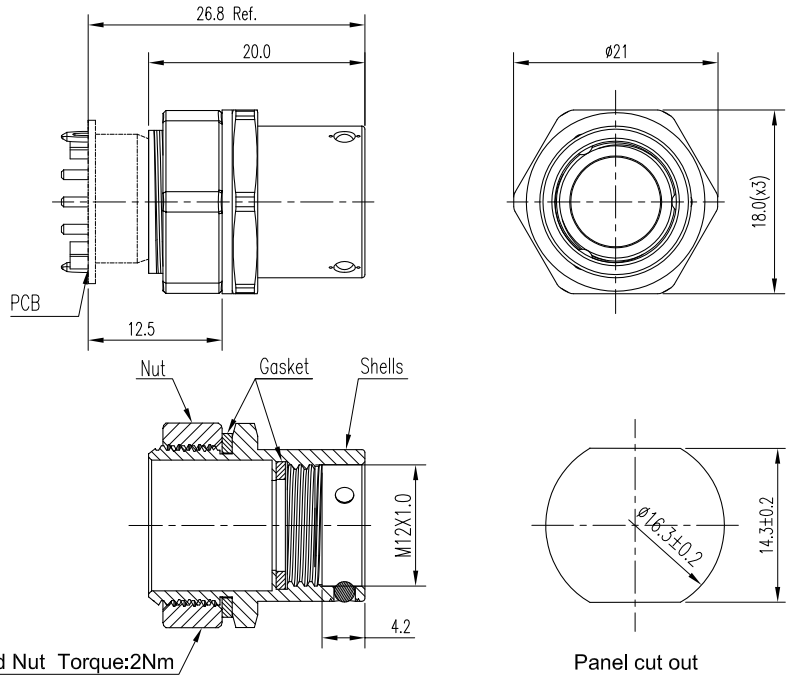

RECEPTACLE INSERT (COMPONENT)

Contact face based on
IEC 61076-2-109

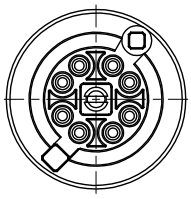

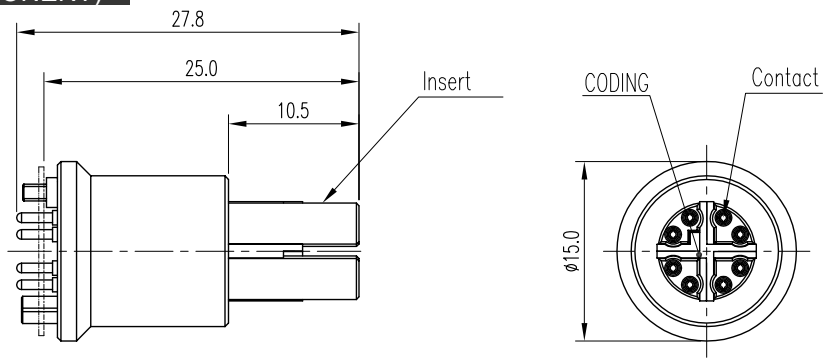

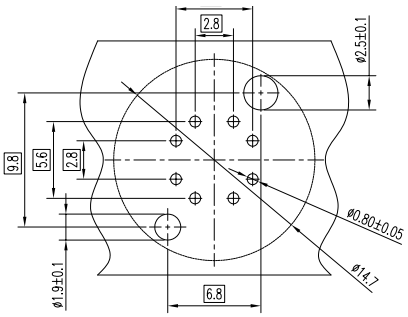

RECOMMENDED FOR PCB LAYOUT

SNAP ON M12 PROTECTION CAP

PLUG'S PROTECTION CAP **P/N:** AS-M12PP-P-CAP-LC

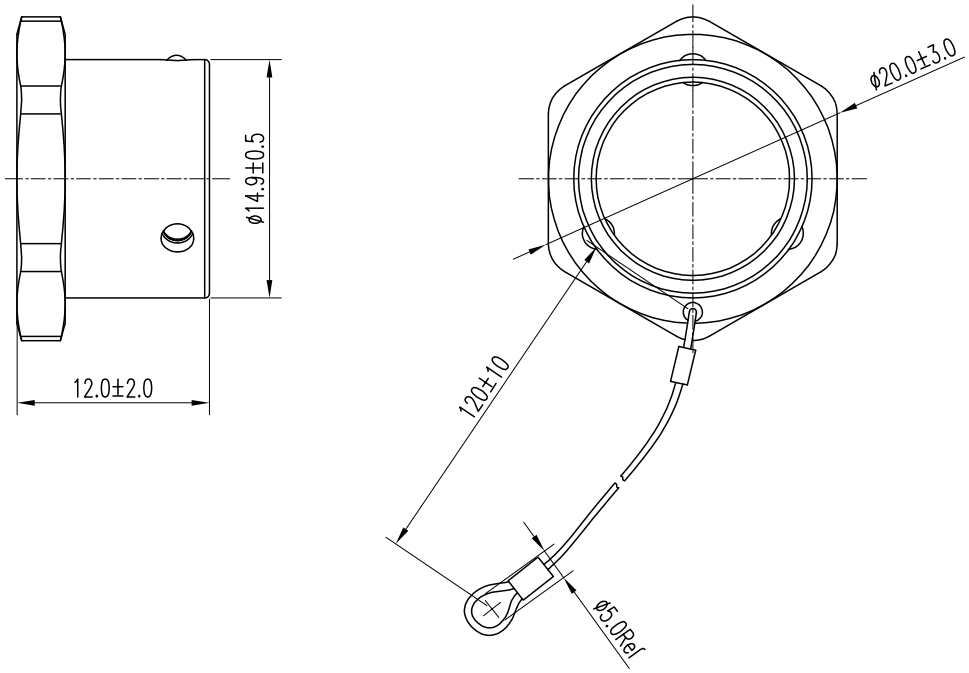

RECEPTACLE'S PROTECTION CAP **P/N:** AS-M12PP-R-CAP-LC

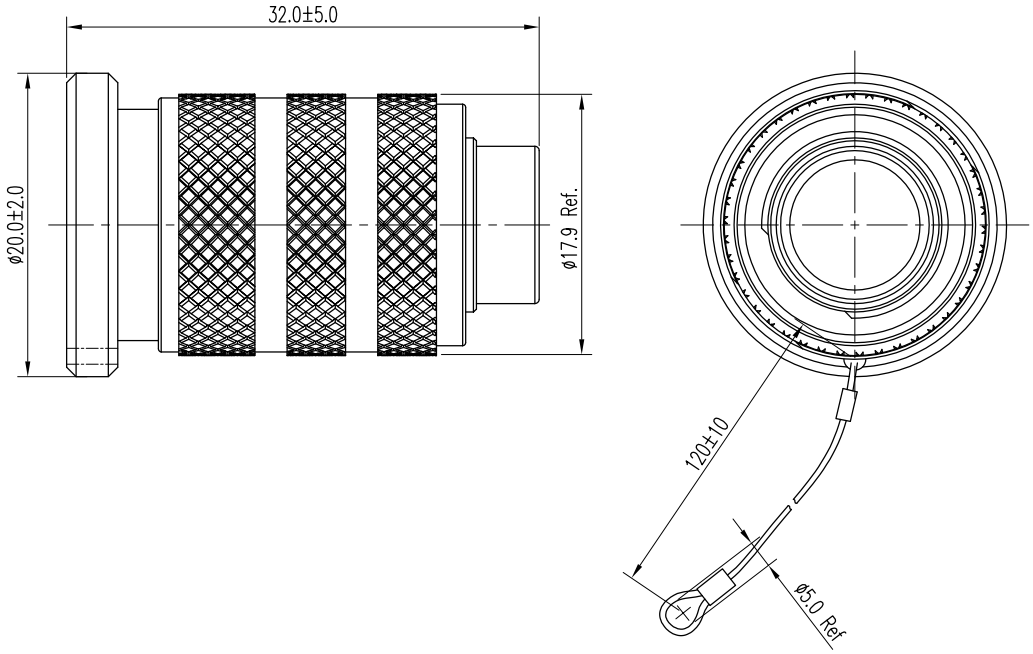

PRODUCT INTRODUCTION

M12 screw connector series has been designed for railway signal transmission.

Crimping contacts and inserting the rubber case are both easy and convenient.

Screw connection.
360° shielding.
Fire protection acc. to EN45545-2 R22 HL3.
Suitable for harsh environments.

CONNECTOR TYPE	
A-Coding	
APPLICATIONS	
Audiovisual communication Passenger information Video Surveillance Passenger entertainment and WiFi Passenger information display Ticket vending machine	
ELECTRICAL	
Insulator resistance	100 MΩ Min
Transmission rate	100 Mbits/s Max
Shielding	360° shielded
MECHANICAL	
Operating Temperature	-25° to 85°C
IP-Class	IP67
Durability	100 cycles
MATERIAL	
Sheath material	(EN45545) Elastomer, electron beam cross-linked
STANDARD	
IEC61076-2-101	

M12 A-CODE PLUG 3 / 4 / 5 / 8 PIN

The following connector doesn't include contacts. Please order them separately (ref: P.30).					
No. PIN	CODING	FRONT VIEW	CURRENT	VOLTAGE	CONTACT SIZE
3PIN	A	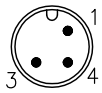	4A	250V	#20
4PIN	A	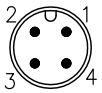	4A	250V	#20
5PIN	A	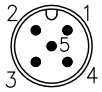	4A	60V	#20
8PIN	A	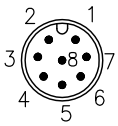	2A	30V	#22

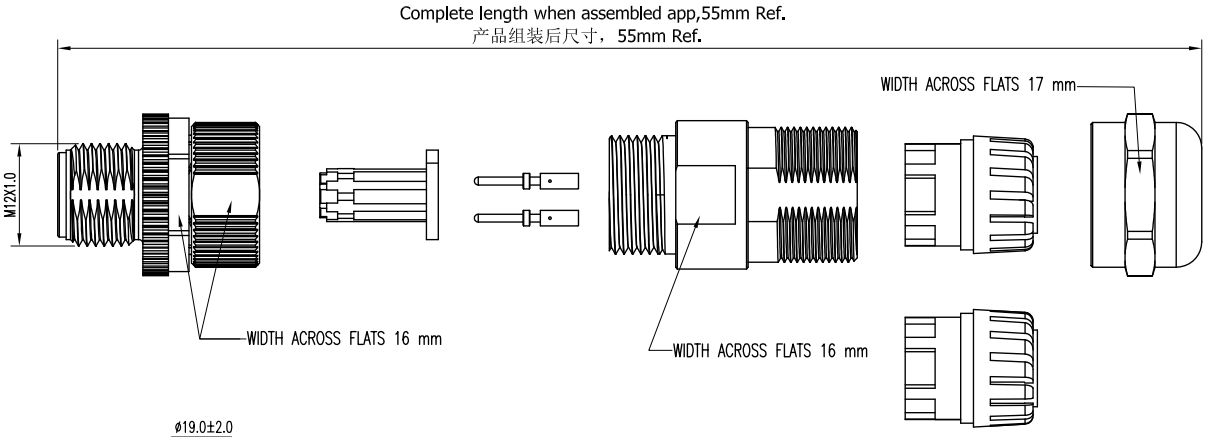

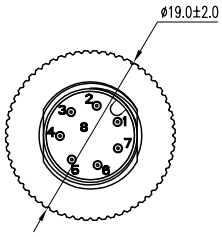

Contact face based on
IEC 61076-2-101

M12 A-CODE PCB PANEL STRAIGHT RECEPTACLE 3 / 4 / 5 / 8 PIN

The following connector doesn't include contacts. Please order them separately (ref: P.30).					
No. PIN	CODING	FRONT VIEW	CURRENT	VOLTAGE	CONTACT SIZE
3PIN	A	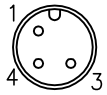	4A	250V	#20
4PIN	A	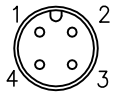	4A	250V	#20
5PIN	A	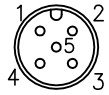	4A	60V	#20
8PIN	A	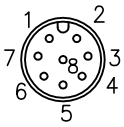	2A	30V	#22

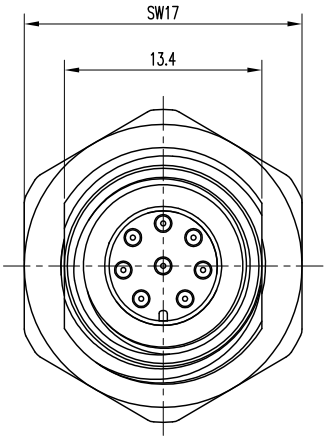

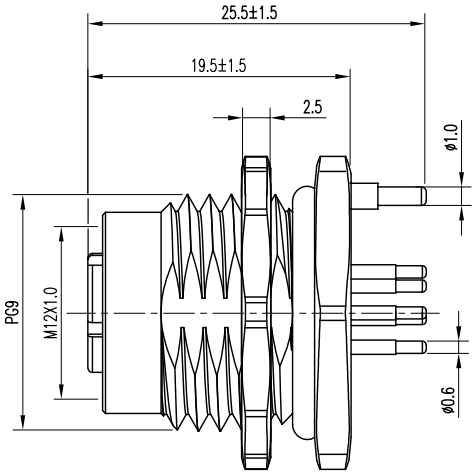

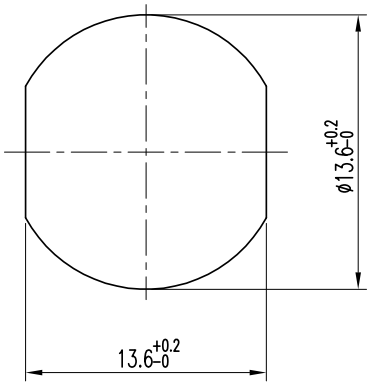

RECOMMENDED PANEL CUT-OUT

PCB LAYOUT REFERENCE			
3PIN	4PIN	5PIN	8PIN
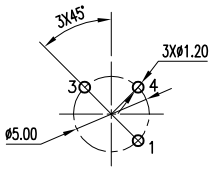	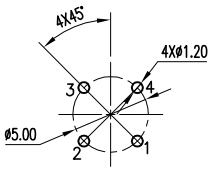	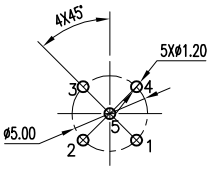	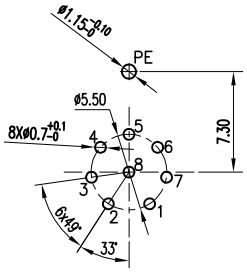

M12 A-CODE STRAIGHT RECEPTACLE 3 / 4 / 5 / 8 PIN

The following connector doesn't include contacts. Please order them separately (ref: P.30).					
No. PIN	CODING	FRONT VIEW	CURRENT	VOLTAGE	CONTACT SIZE
3PIN	A	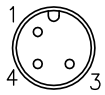	4A	250V	#20
4PIN	A	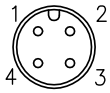	4A	250V	#20
5PIN	A	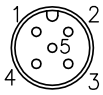	4A	60V	#20
8PIN	A	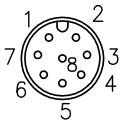	2A	30V	#22

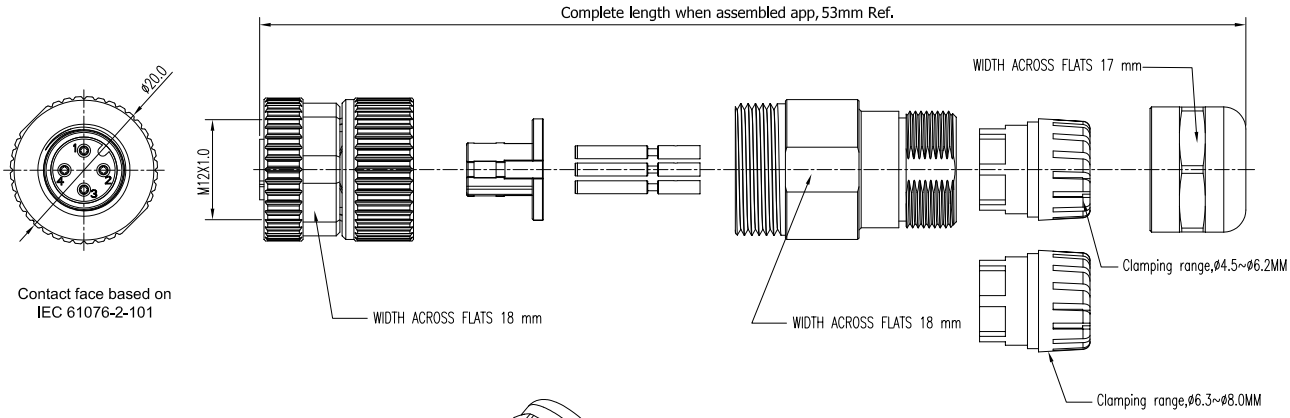

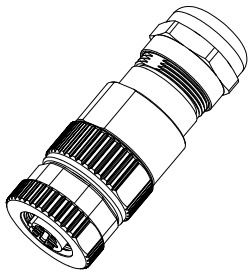

M12 A-CODE ELBOW RECEPTACLE 3 / 4 / 5 / 8 PIN

The following connector doesn't include contacts. Please order them separately (ref: P.30).					
No. PIN	CODING	FRONT VIEW	CURRENT	VOLTAGE	CONTACT SIZE
3PIN	A	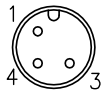	4A	250V	#20
4PIN	A	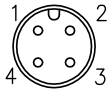	4A	250V	#20
5PIN	A	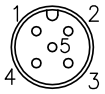	4A	60V	#20
8PIN	A	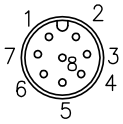	2A	30V	#22

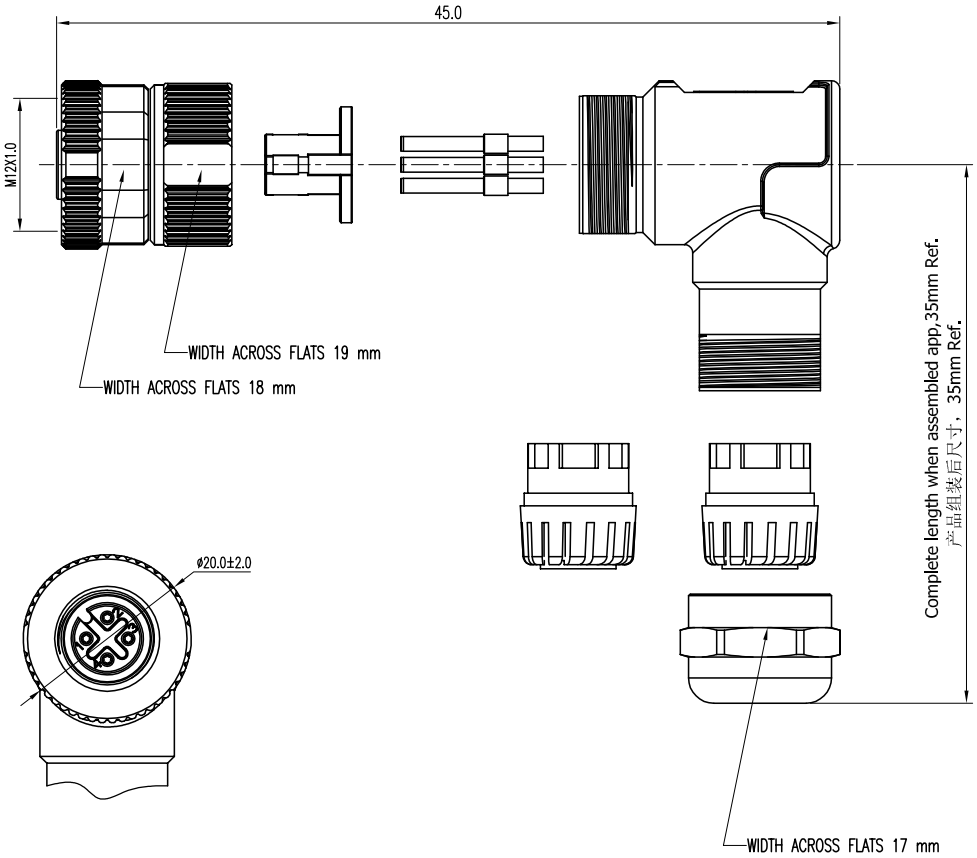

SCREW M12 D-CODE

PRODUCT INTRODUCTION

M12 screw connector series has been designed for railway signal transmission.

Crimping contacts and inserting the rubber case are both easy and convenient.

Screw connection.
360° shielding.
Fire protection acc. to EN45545-2 R22 HL3.
Suitable for harsh environments.

CONNECTOR TYPE	
D-Coding	
APPLICATIONS	
Audiovisual communication Passenger information Video Surveillance Passenger entertainment and WiFi Passenger information display Ticket vending machine	
ELECTRICAL	
Insulator resistance	100 MΩ Min
Transmission rate	100 Mbits/s Max
Shielding	360° shielded
MECHANICAL	
Operating Temperature	-25° to 85°C
IP-Class	IP67
Durability	100 cycles
MATERIAL	
Sheath material	(EN45545) Elastomer, electron beam cross-linked
STANDARD	
IEC 61076-2-101	

M12 D-CODE PLUG 4 PIN

The following connector doesn't include contacts. Please order them separately (ref: P.31).					
No. PIN	CODING	FRONT VIEW	CURRENT	VOLTAGE	CONTACT SIZE
4PIN	D	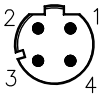	4A	250V	#20

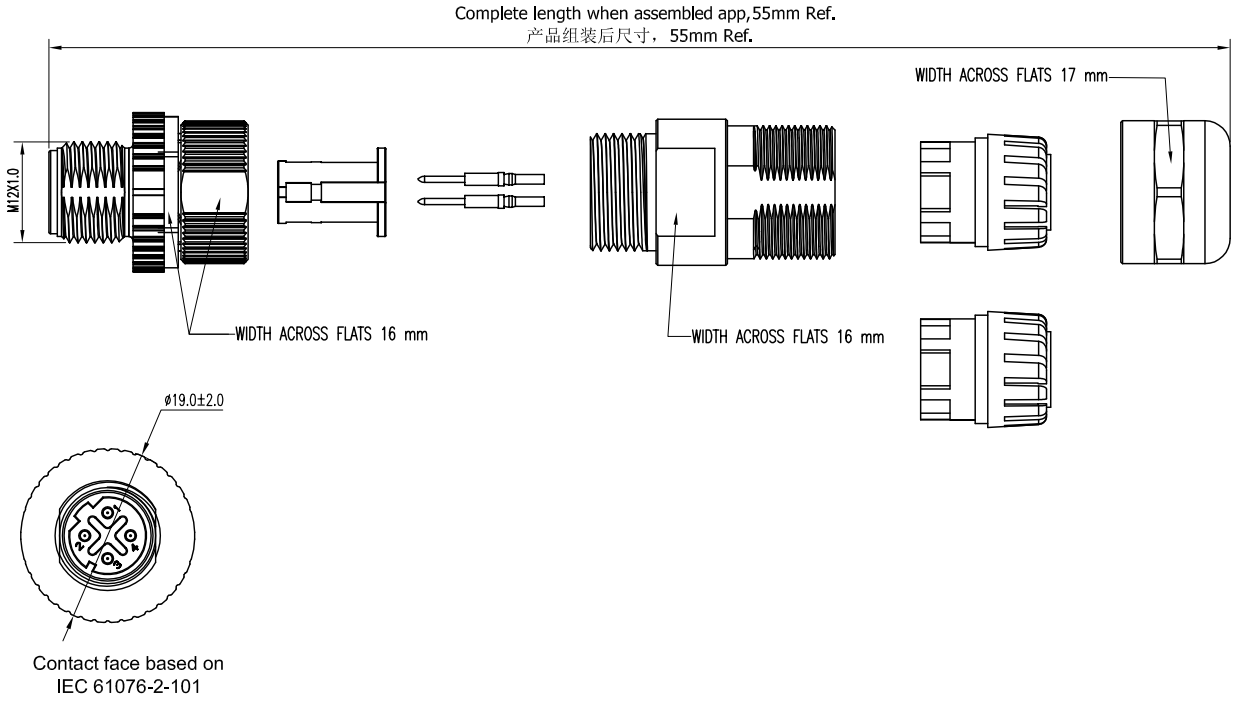

M12 D-CODE ELBOW PLUG 4 PIN

The following connector doesn't include contacts. Please order them separately (ref: P.31).					
No. PIN	CODING	FRONT VIEW	CURRENT	VOLTAGE	CONTACT SIZE
4PIN	D	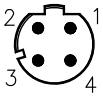	4A	250V	#20

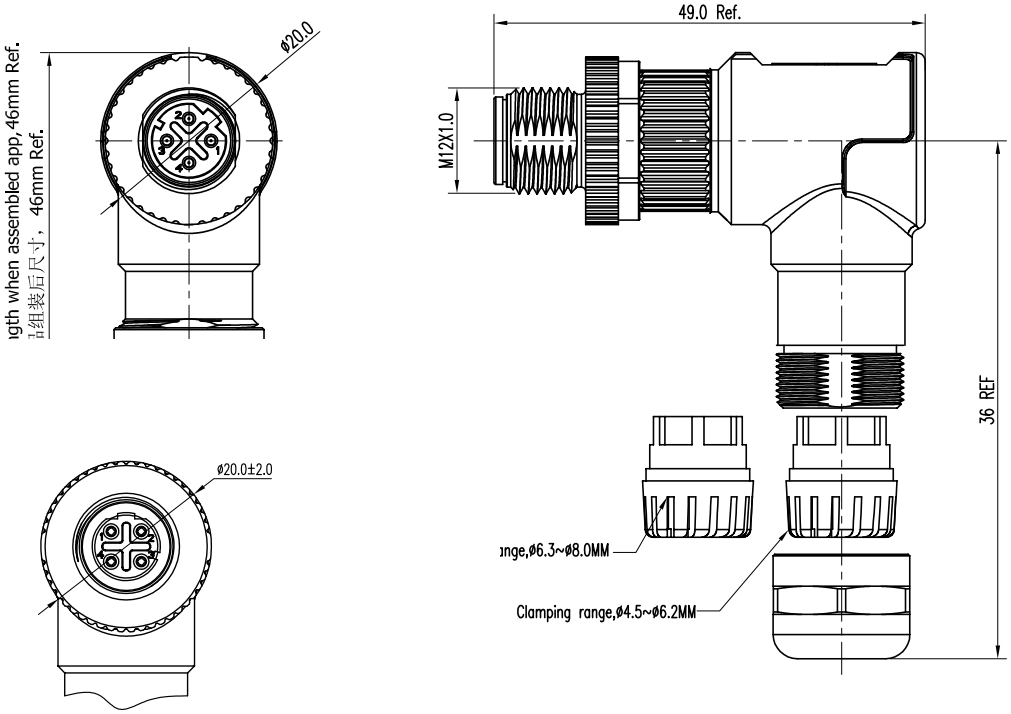

M12 D-CODE PCB PANEL STRAIGHT RECEPTACLE 4 PIN

The following connector doesn't include contacts. Please order them separately (ref: P.31).					
No PIN	CODING	FRONT VIEW	CURRENT	VOLTAGE	CONTACT SIZE
4PIN	D	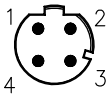	4A	250V	#20

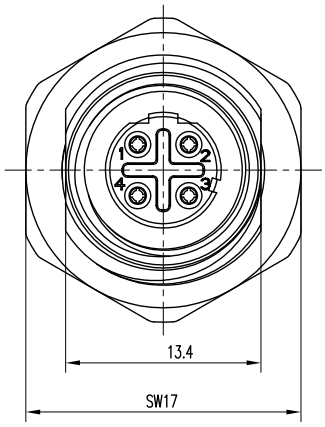

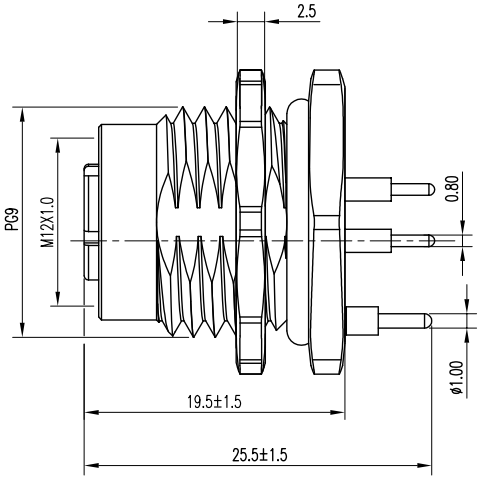

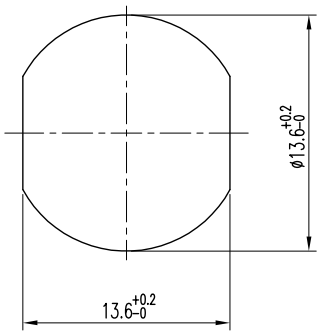

RECOMMENDED PANEL CUT-OUT

PCB LAYOUT REFERENCE
4PIN
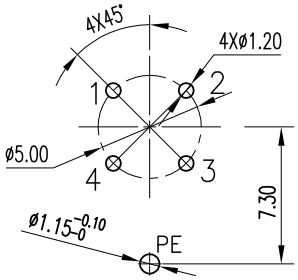

M12 D-CODE PCB PANEL ELBOW RECEPTACLE 4 PIN

The following connector doesn't include contacts. Please order them separately (ref: P.31).

No PIN	CODING	FRONT VIEW	CURRENT	VOLTAGE	CONTACT SIZE
4PIN	D	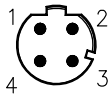	4A	250V	#20

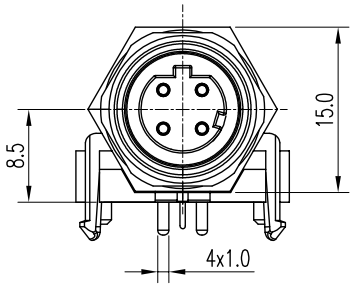

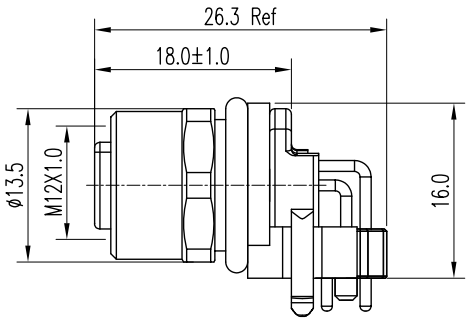

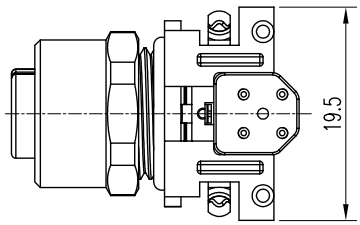

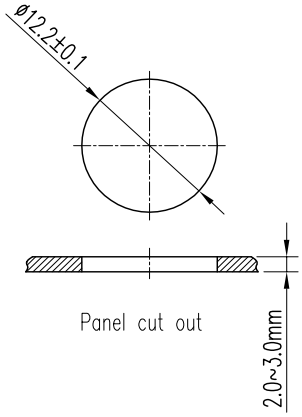

RECOMMENDED PANEL CUT-OUT

PCB LAYOUT REFERENCE

4PIN

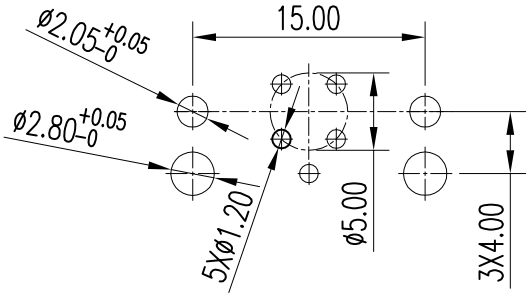

RECOMMENDED PCB LAYOUI

M12 D-CODE STRAIGHT RECEPTACLE 4 PIN

The following connector doesn't include contacts. Please order them separately (ref: P.31).					
No. PIN	CODING	FRONT VIEW	CURRENT	VOLTAGE	CONTACT SIZE
4PIN	D	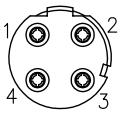	4A	250V	#20

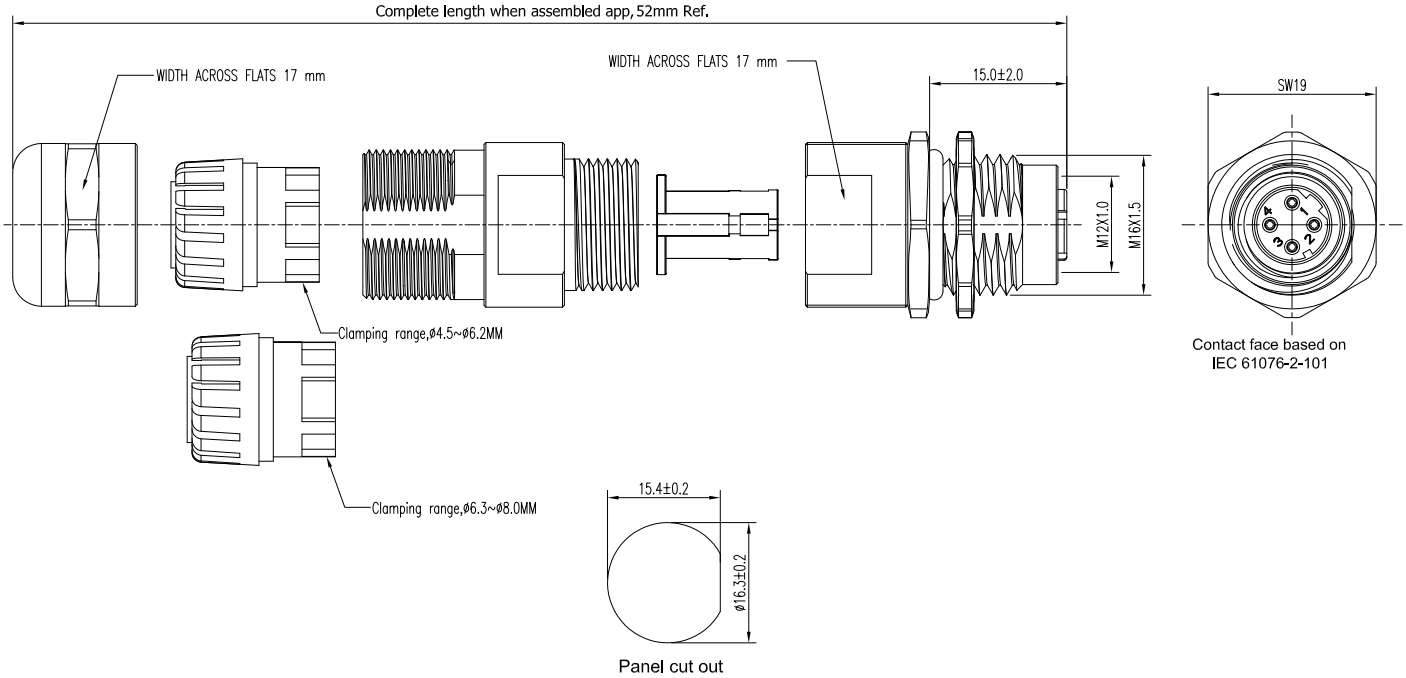

M12 D-CODE ELBOW RECEPTACLE 4 PIN

The following connector doesn't include contacts. Please order them separately (ref: P.31).					
No. PIN	CODING	FRONT VIEW	CURRENT	VOLTAGE	CONTACT SIZE
4PIN	D	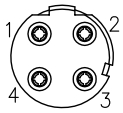	4A	250V	#20

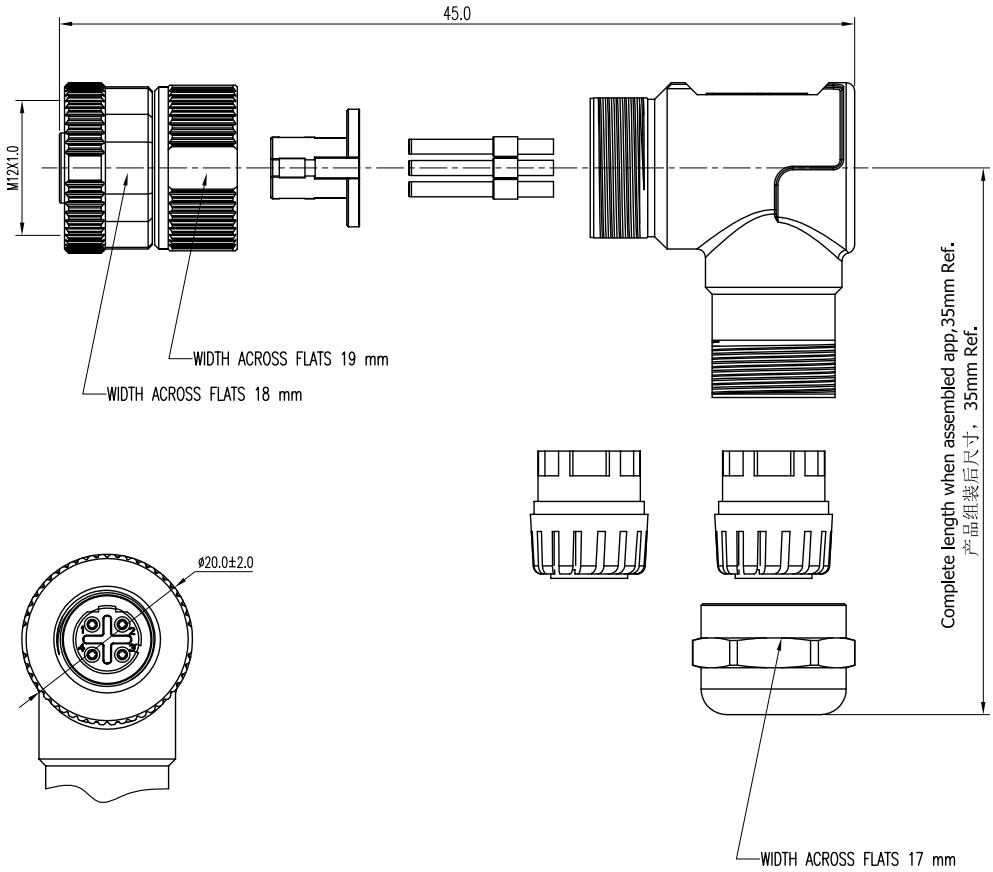

PRODUCT INTRODUCTION

M12 screw connector series has been designed for railway signal transmission.

Crimping contacts and inserting the rubber case are both easy and convenient.

Quick connection.
360° shielding.
Fire protection acc. to EN45545-2 R22 HL3.
Suitable for harsh environments.
Fast data transmission rate.

CONNECTOR TYPE	
X-Coding	
APPLICATIONS	
Audiovisual communication Passenger information Video Surveillance Passenger entertainment and WiFi Passenger information display Ticket vending machine	
ELECTRICAL	
Insulator resistance	100 MΩ Min
Transmission rate	1 to 10G Mbits/s
Shielding	360° shielded
MECHANICAL	
Operating Temperature	-25° to 85°C
IP-Class	IP67
Durability	100 cycles
MATERIAL	
Sheath material	(EN45545) Elastomer, electron beam cross-linked
STANDARD	
IEC 61076-2-109	

M12 X-CODE PLUG 8 PIN

The following connector doesn't include contacts. Please order them separately (ref: P.31).					
No. PIN	CODING	FRONT VIEW	CURRENT	VOLTAGE	CONTACT SIZE
8PIN	X		0.5A	48V	#24

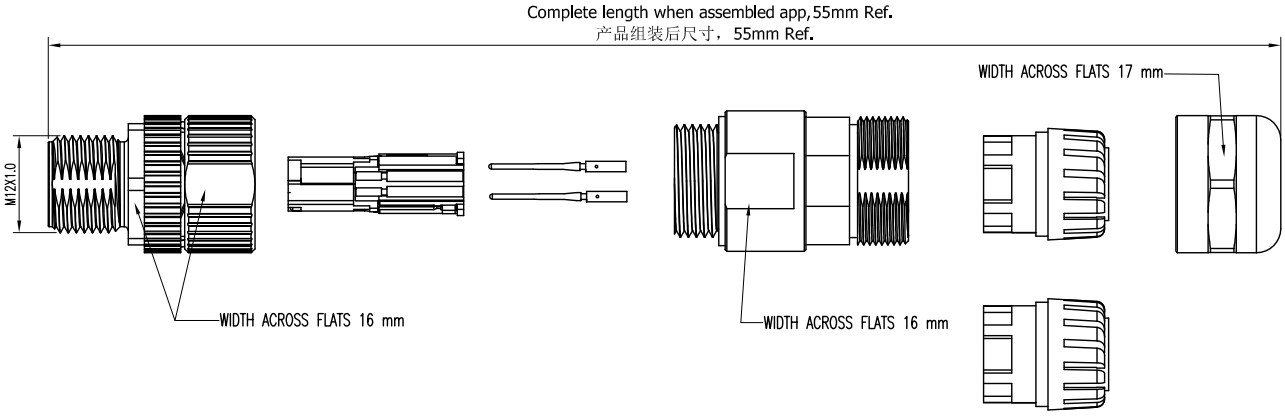

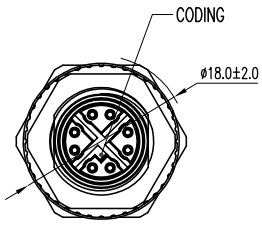

M12 X-CODE STRAIGHT RECEPTACLE 8 PIN

The following connector doesn't include contacts. Please order them separately (ref: P.31).					
No. PIN	CODING	FRONT VIEW	CURRENT	VOLTAGE	CONTACT SIZE
8PIN	X		0.5A	48V	#24

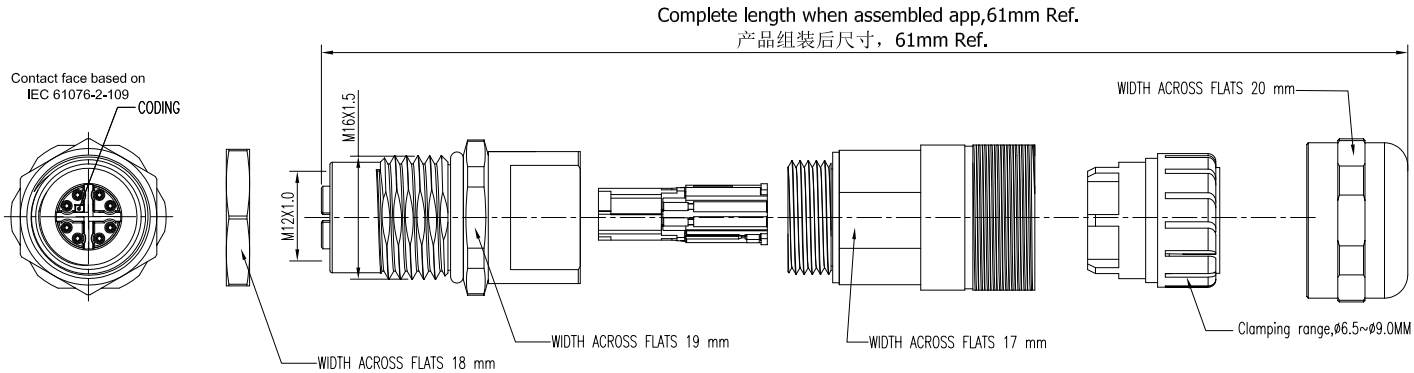

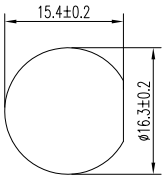

Panel cut out

#20 CONTACT

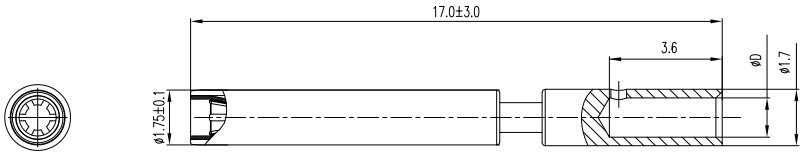

Female contact

P/N	ØA	CABLE SPEC.	AWG
P01DM0068801	0.64	0.08 to 0.20mm^2	28 to 24
P01DM0068802	0.88	0.13 to 0.32mm^2	26 to 22
P01DM0068803	1.13	0.25 to 0.52mm^2	24 to 20

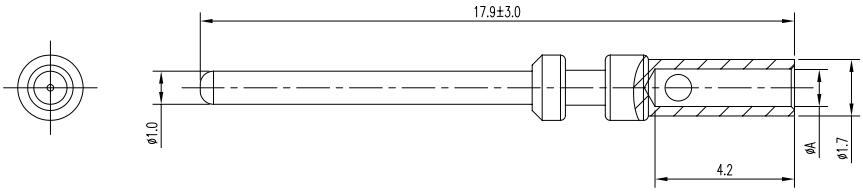

Male contact

P/N	ØA	CABLE SPEC.	AWG
P01DM0074501	0.64	0.09 to 0.25mm^2	24 to 28
P01DM0074502	0.88	0.13 to 0.33mm^2	22 to 26
P01DM0074503	1.13	0.25 to 0.52mm^2	20 to 24

#22 CONTACT

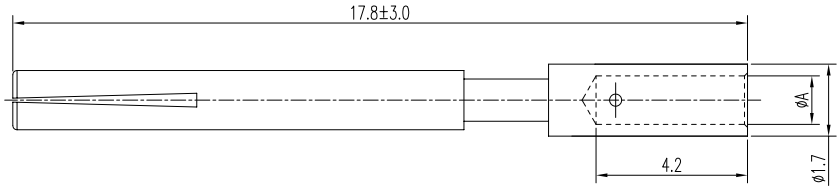

Female contact

P/N	ØA	CABLE SPEC.	AWG
P01DM0077501	0.64	0.09 to 0.25mm^2	24 to 28
P01DM0077502	0.88	0.13 to 0.33mm^2	22 to 26
P01DM0077503	1.0	0.25 to 0.52mm^2	20 to 24

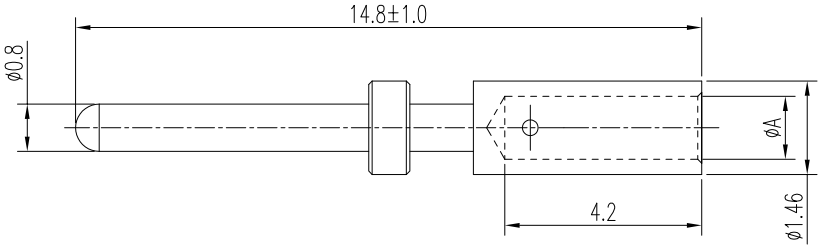

Male contact

P/N	ØA	CABLE SPEC.	AWG
P02D00006503	0.64	0.09 to 0.25mm^2	28 to 24
P02D00006502	0.88	0.13 to 0.33mm^2	26 to 22
P02D00006501	1.0	0.25 to 0.52mm^2	24 to 20

#20 CONTACT (D-CODE)

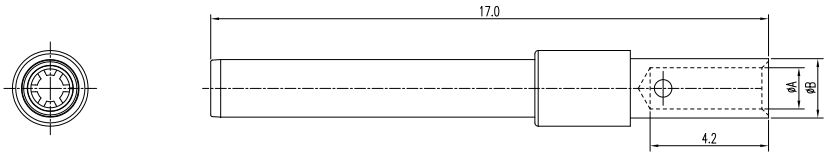

Female contact

P/N	ØA	ØB	CABLE SPEC.	AWG
P02D0025001	0.64	1.7	0.09 to 0.25mm^2	28 to 24
P02D0025002	0.88	1.7	0.13 to 0.33mm^2	26 to 22
P02D0025003	1.13	1.7	0.25 to 0.52mm^2	24 to 20
P02D0025004	1.25	1.8	0.50 to 1.0mm^2	20 to 18

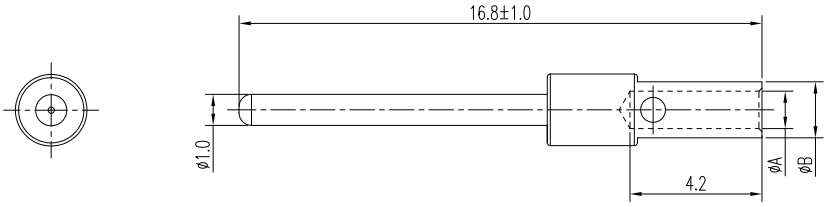

Male contact

P/N	ØA	ØB	CABLE SPEC.	AWG
P02D00016101	0.64	1.7	0.09 to 0.25mm^2	28 to 24
P02D00016102	0.88	1.7	0.13 to 0.33mm^2	26 to 22
P02D00016103	1.13	1.7	0.25 to 0.52mm^2	24 to 20
P02D00016104	1.25	1.8	0.50 to 1.0mm^2	20 to 18

#24 CONTACT (X-CODE)

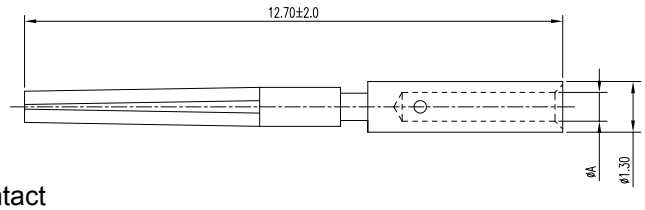

Female contact

P/N	ØA	CABLE SPEC.	AWG
P03DM0046802	0.64	0.13 to 0.20mm^2	26 to 24

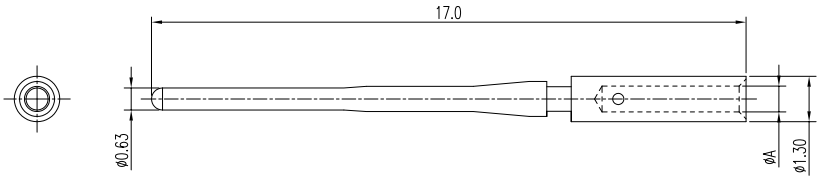

Male contact

P/N	ØA	CABLE SPEC.	AWG
P02DM0023401	0.64	0.13 to 0.20mm^2	26 to 24

TOOL

CRIMPING TOOL

Crimping tool model	Crimping tool positions	Wire size AWG	Cable Size (MM²)
M22520/2-01 (DMC-AFM8) manual crimping tool DMC-WA22 pneumatic crimping tool	3 positions	28	0.0804
	4 positions	26	0.1281
	5 positions	24	0.2047
	6 positions	22	0.3247
	7 positions	20	0.5189
	8 positions	18	0.8107

Amphenol アンフェノール ジャパン株式会社
□ 本社・工場　〒520-3041　滋賀県栗東市出庭471-1　TEL 077-553-8503（代）FAX 077-551-2200
□ 横浜オフィス　〒222-0033　神奈川県横浜市港北区新横浜2-2-8　TEL 045-473-9219（代）FAX 045-473-9204
https://www.amphenol.co.jp/industrial

201911-100-APJ