REVISIONS M		
LTR	DESCRIPTION	DATE
A	INITIAL RELEASE	11-FEB-16

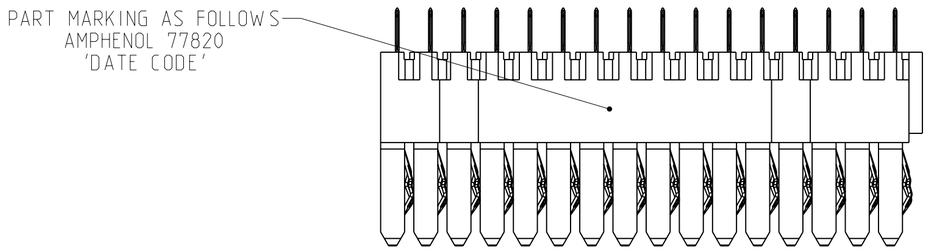

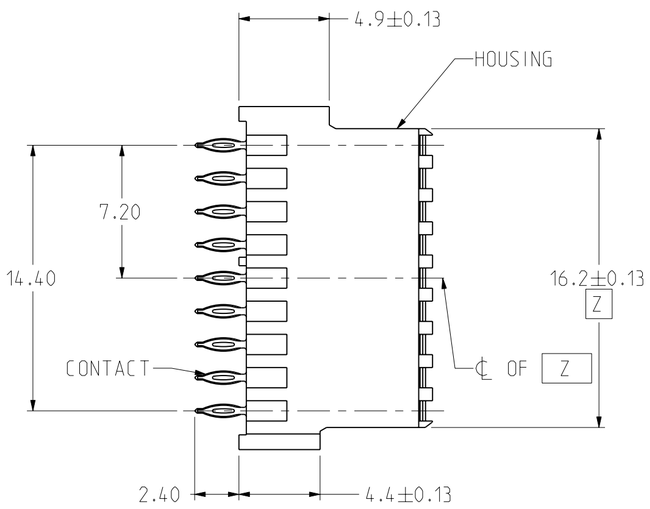

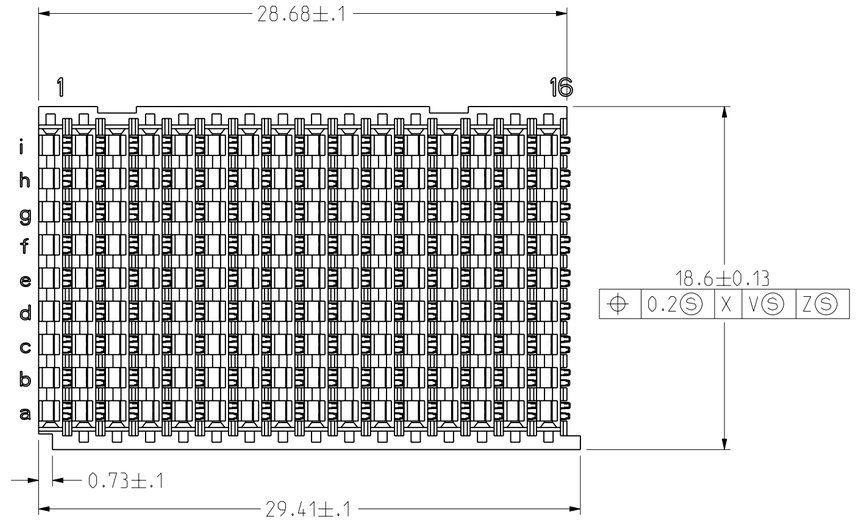

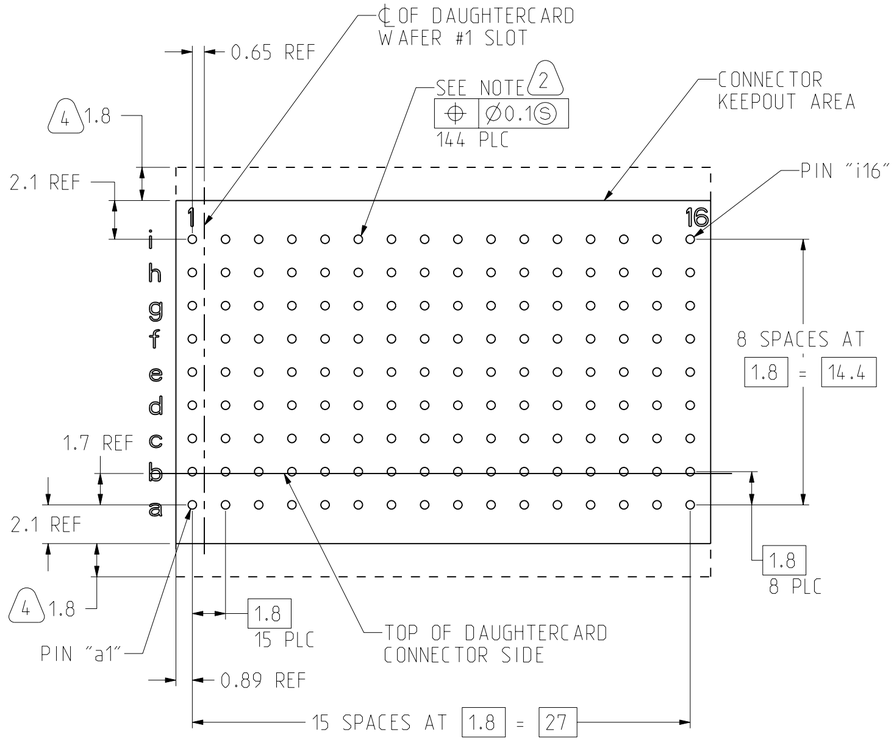

PC BOARD LAYOUT
(CONNECTOR SIDE)
SCALE 4/1

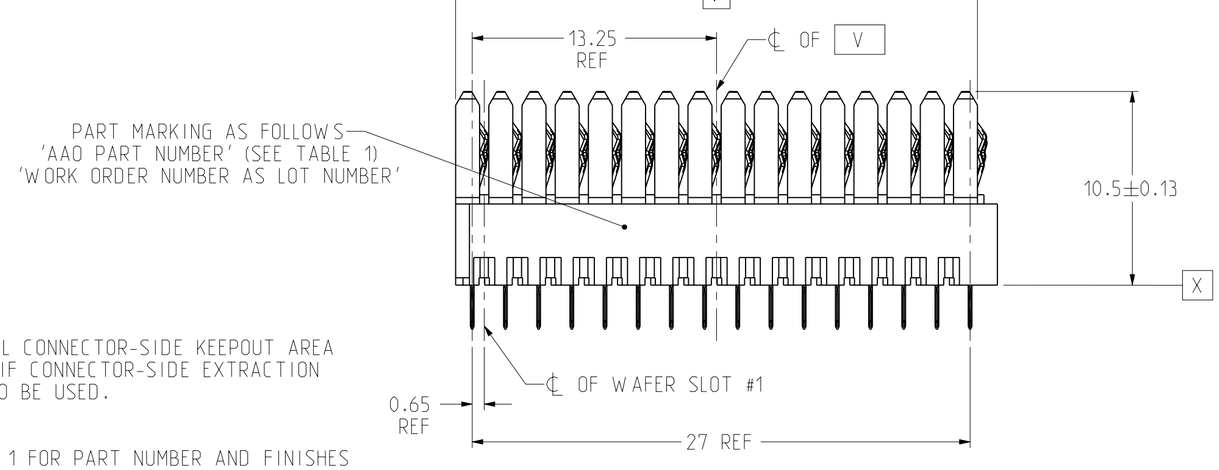

TABLE 1

PLATING THICKNESS AND MATERIAL BY PART NUMBER			
PART NUMBER	GOLD IN CONTACT AREA	COMPLIANT	NICKEL OVERALL
RVPX-J16MM1	50 µ-INCH MIN	50 µ-INCH MIN TIN	50 µ-INCH MIN
RVPX-J16MM2	50 µ-INCH MIN	50 µ-INCH MIN TIN-LEAD	50 µ-INCH MIN
RVPX-J16MC1	30 µ-INCH MIN	50 µ-INCH MIN TIN	50 µ-INCH MIN
RVPX-J16MC2	30 µ-INCH MIN	50 µ-INCH MIN TIN-LEAD	50 µ-INCH MIN

4 ADDITIONAL CONNECTOR-SIDE KEEPOUT AREA REQUIRED IF CONNECTOR-SIDE EXTRACTION TOOL IS TO BE USED.

3 SEE TABLE 1 FOR PART NUMBER AND FINISHES

2 PTH CALLOUT
TYPICAL HOLE
Ø0.63-.67 DRILL
Ø0.56 ±.05 FINISH HOLE
Ø1.02 PAD

NOTES:

1 HOUSING: GLASS FILLED LCP, UL94 - V0
CONTACT: Cu ALLOY

THE USE OF THIS DOCUMENT IS UNLIMITED. HOWEVER, DOCUMENTS REFERENCED HEREON MAY CONTAIN LIMITED RIGHTS DATA.

N/A
NEXT ASSEMBLY

PRO/ENGINEER INFORMATION
Pro/e Model Used: RVPX-J8EXX_PART
Drawing Name: RVPX-J16MXX

UNLESS OTHERWISE SPECIFIED
LINEAR DIMENSIONS ARE IN MILLIMETERS
TOLERANCES:
.XXXX = ±.- ANGLES= ±1°
.XXX = ±.-
.XX = ±.13
.X = ±.5
DIM.& TOL. PER ASME Y14.5M;
DRM PER MIL-DTL-31000;
OTHER Amphenol Stds. PER 9-3800
LEGENDS:
=FLAG NOTE CALL OUT
REFERENCE ONLY

SPECIFICATIONS
MATERIAL SPEC.
N/A
PROCESS SPEC.
9-3895
9-3856-5

POS	QTY	PART NUMBER	DESCRIPTION	NOTE

PARTS LIST

APPROVALS		DATE
PREPARED BY	S.LANGELIER	22-SEP-15
ENGINEER IN CHARGE	S.LANGELIER	
DESIGN MANAGER	J.PAUL	
DESIGN ACTIVITY GROUP	BOARD LEVEL	

THIRD ANGLE PROJECTION

AMPHENOL CORPORATION
40-60 DELAWARE AVENUE
SIDNEY, N.Y. 13838

CONNECTOR ASSEMBLY, BACKPLANE VERTICAL RECEPTACLE, 16 POS., CENTER RVPX

SIZE	CAGE CODE	DOCUMENT NO.	REV.
C	77820	RVPX-J16MXX	A
SCALE: 4.0	REF: NONE	SHEET 1 OF 2	

DOCUMENT NO. RVPX-J16MXX | SHEET 1 OF 2 | REV. A

FORMAT: C-U.E-1

IMAGED / Feb . 24 2016, 4:11:38 PM

REAR TRANSITION MODULE APPLICATION

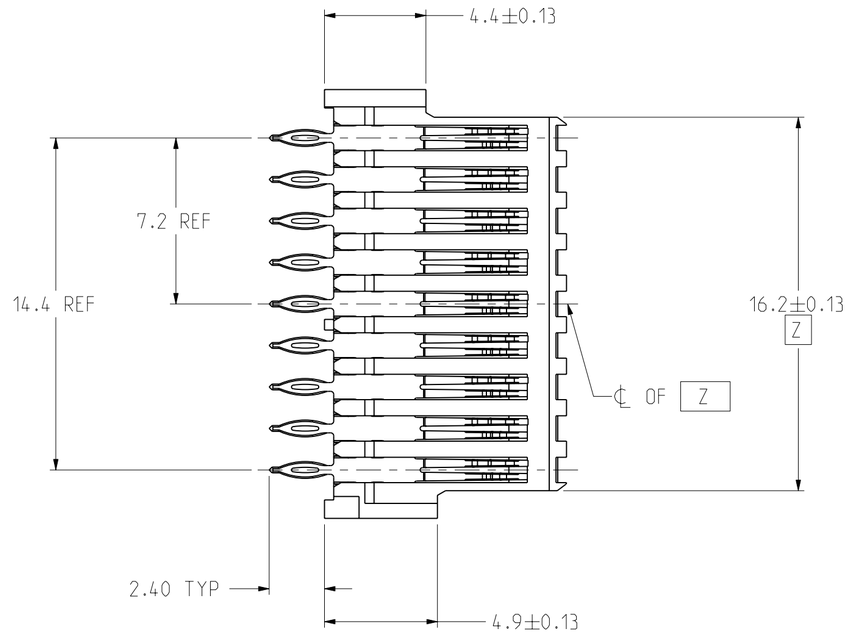

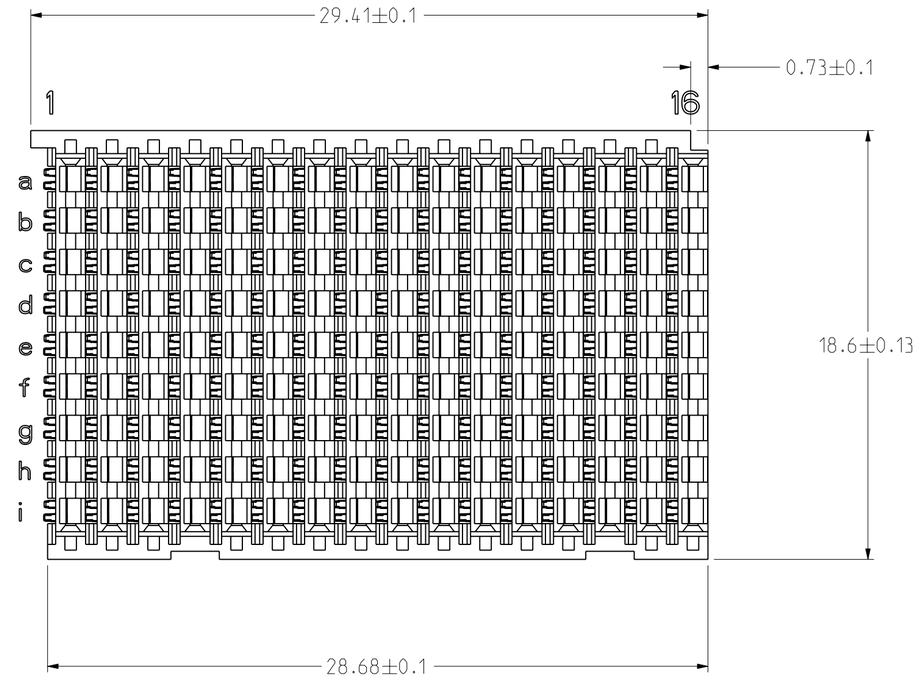

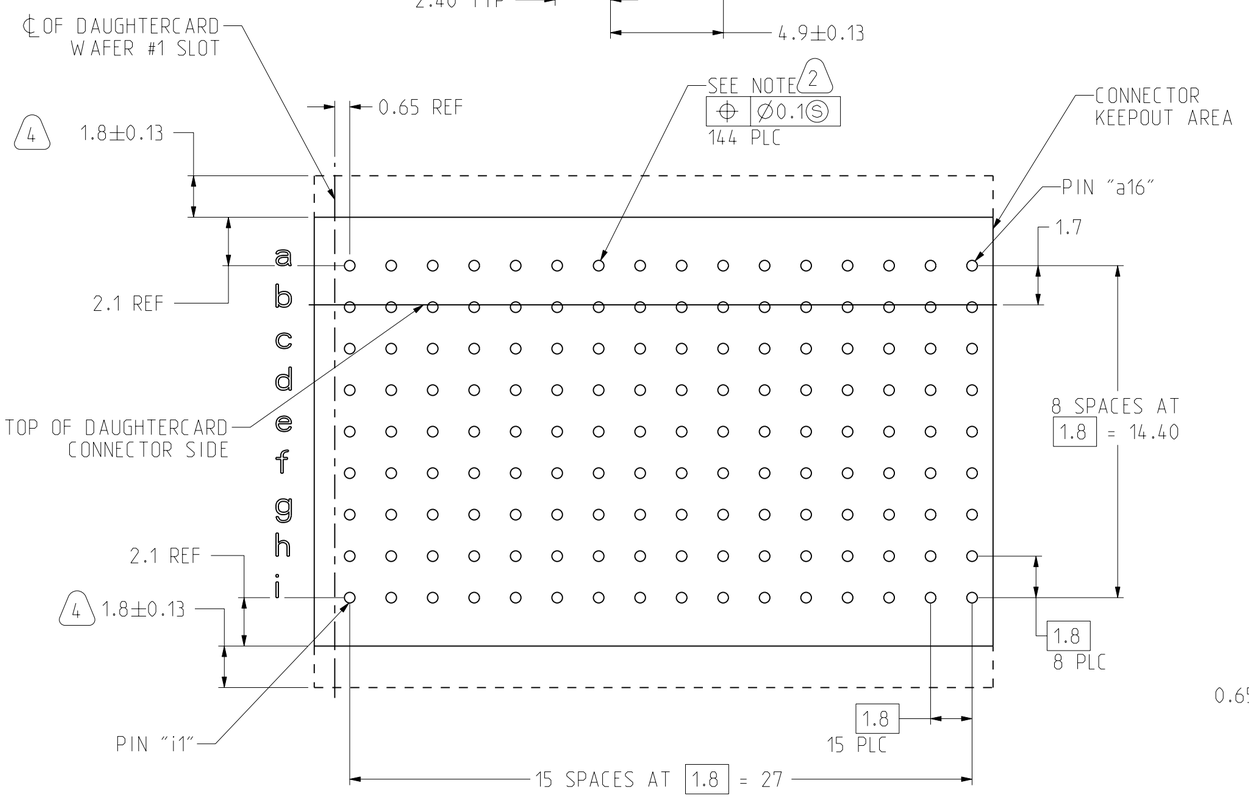

RTM PC BOARD LAYOUT
(CONNECTOR SIDE)
SCALE 5/1

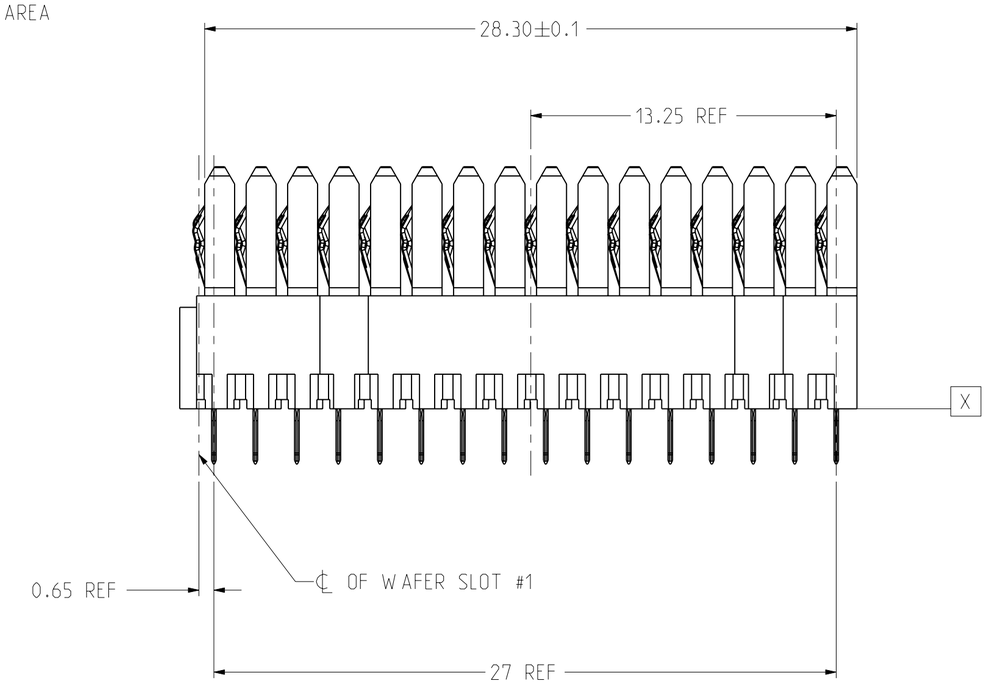

NOTES:

THE USE OF THIS DOCUMENT IS UNLIMITED.
HOWEVER, DOCUMENTS REFERENCED HEREON
MAY CONTAIN LIMITED RIGHTS DATA.

SIZE	CAGE CODE	DOCUMENT NO.	REV.
C	77820	RVPX-J16MXX	A
SCALE: 5.0	REF: NONE	SHEET 2 OF 2	

IMAGED / Feb . 24 2016, 4:11:38 PM

DOCUMENT NO. RVPX-J16MXX | SHEET 2 OF 2 | REV. A

Eng PDM Information For Reference Only | REVISION A | VERSION 5

FORMAT: C-U.E-1