AMPHENOL PCD SHENZHEN

SFBC

High-current contacts

www.amphenolpcd.com.cn

INDUSTRIAL@AMPHENOL
TRUSTED GLOBALLY

TABLE OF CONTENT

USE CASES 2
P03BS00092 4
P03BS00107 5
P01BS00118 6
P01BS00119 7
P03BS0011101 8
P03BS0011102 9

POWER-TO-BOARD

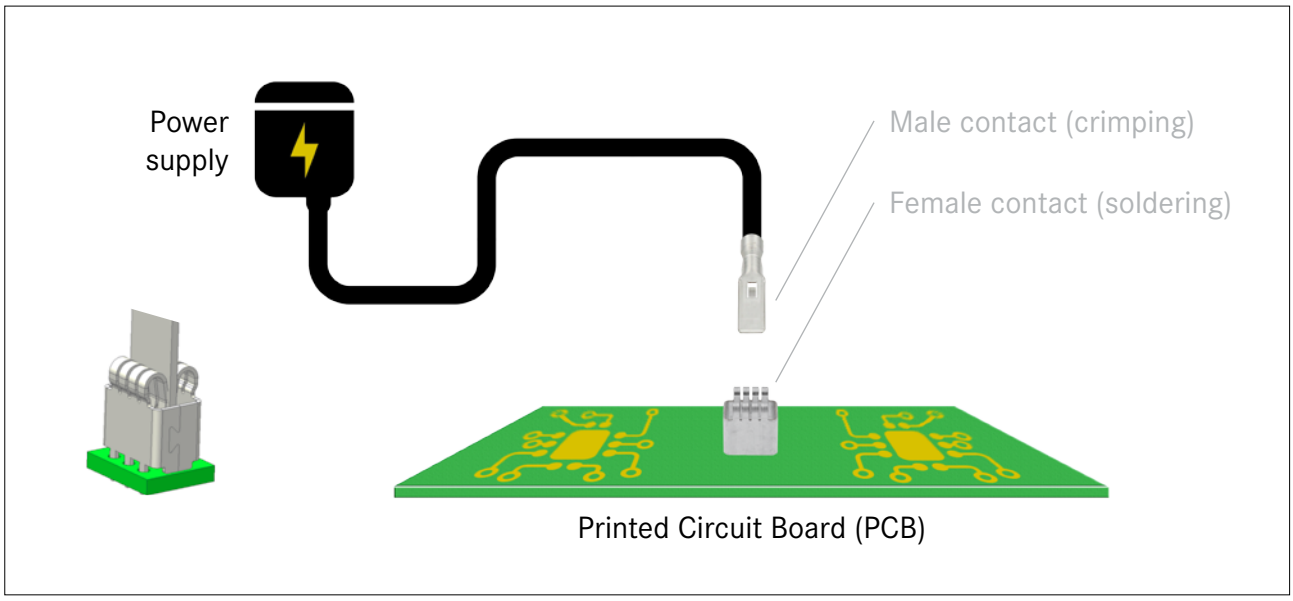

Female contact **above** PCB.

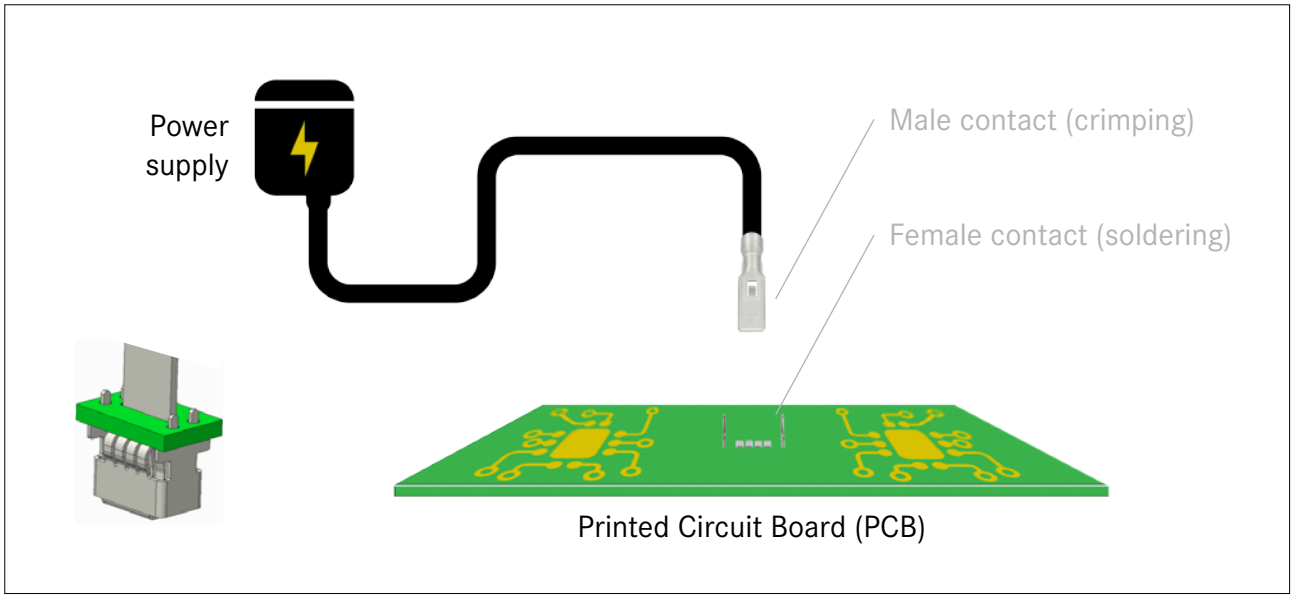

Female contact **under** PCB.

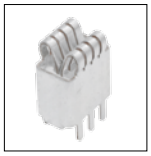

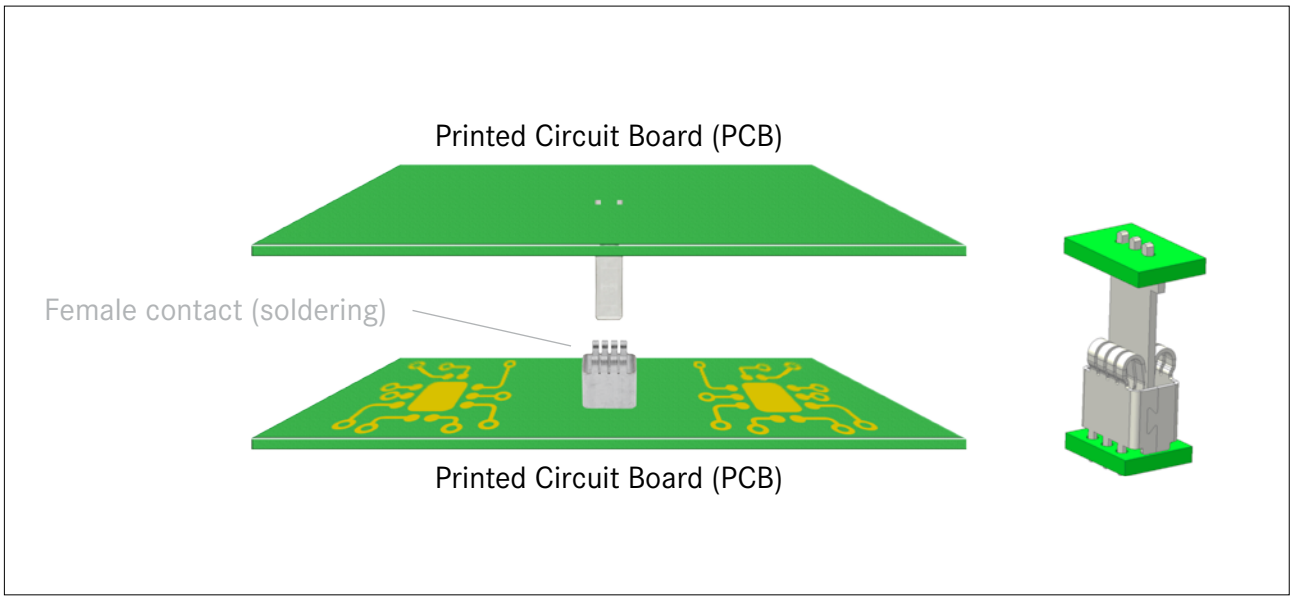

Female contact **above** PCB.

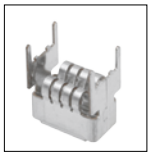

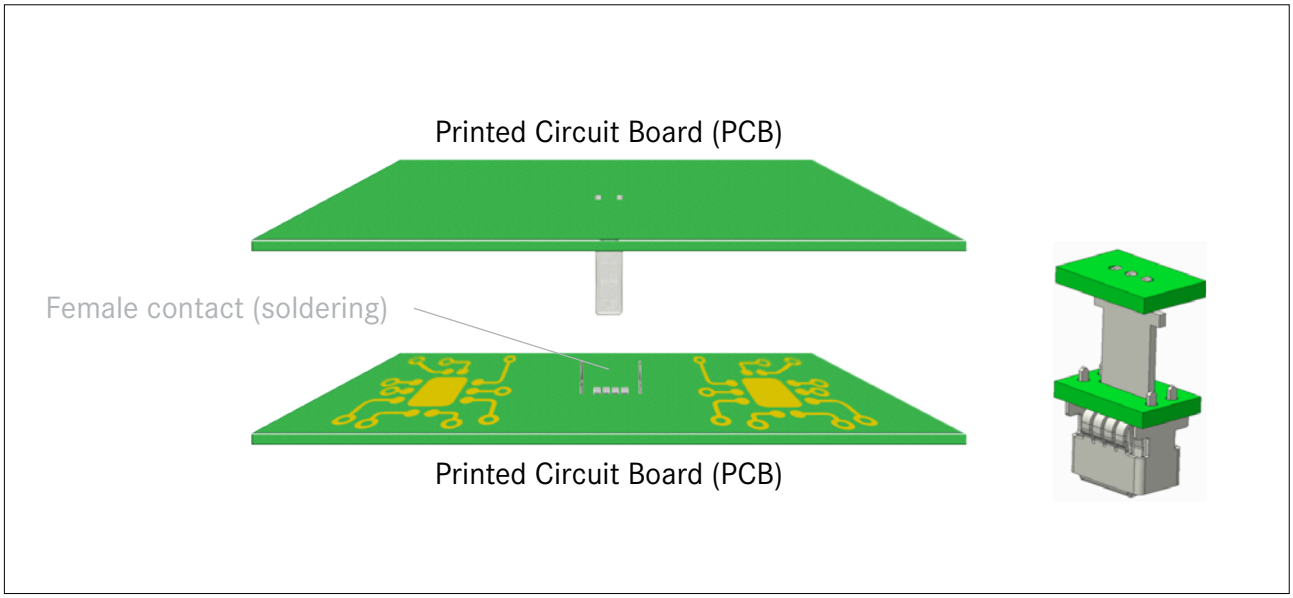

Female contact **under** PCB.

P03BS00092

MECHANICAL	
Durability	> 50 mating cycles
Insertion force	< 35N
Pullout force	> 5N
Matching male contact	8.0 x 1.0mm
Connection type	Soldering

Bulk purchase: **180** units per pack

ELCTRICAL	
Rated current	80A
Contact resistance	≤ 1.0mΩ
Temperature rise	≤ 55K

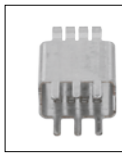

ENVIRONMENTAL	
Operating temperature	-40°C to 125°C
Ambient temperature	-40°C to 70°C
RoHS	Yes

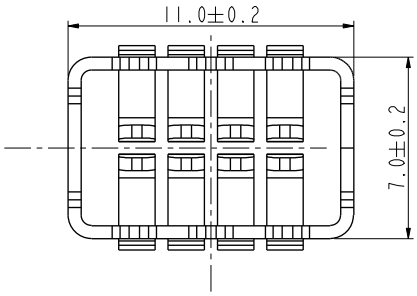

MATERIAL	
Contact	Copper alloy
Plating	Tin

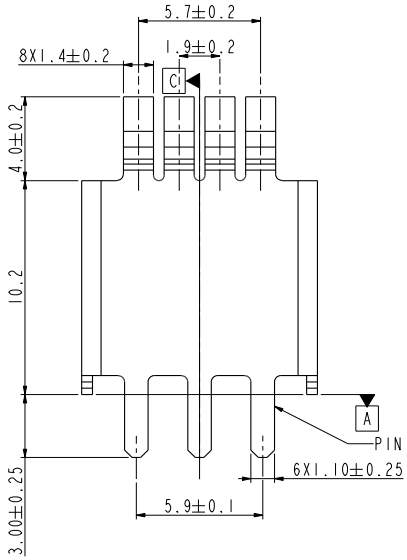

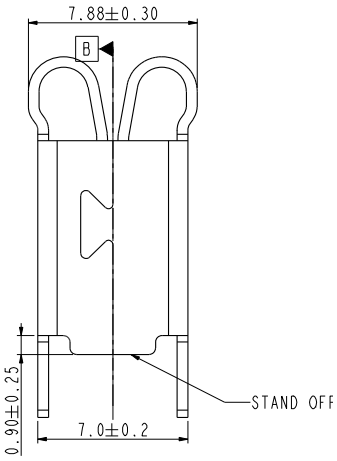

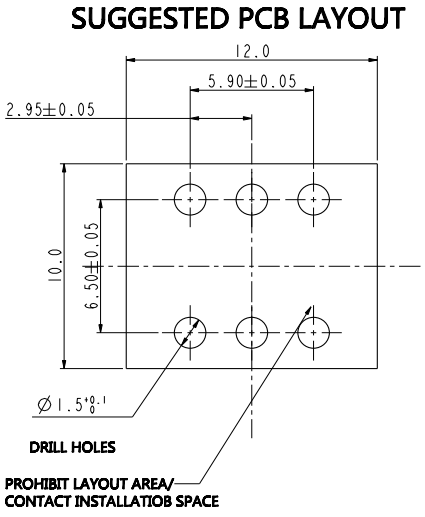

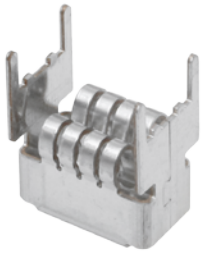

Bulk purchase: **200** units per pack

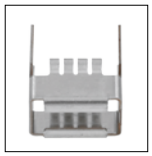

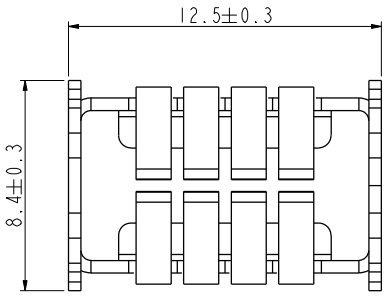

MECHANICAL	
Durability	> 50 mating cycles
Insertion force	< 35N
Pullout force	> 5N
Matching male contact	8.0 x 1.0mm
Connection type	Soldering

ELCTRICAL	
Rated current	80A
Contact resistance	≤ 1.0mΩ
Temperature rise	≤ 55K

ENVIRONMENTAL	
Operating temperature	-40°C to 125°C
Ambient temperature	-40°C to 70°C
RoHS	Yes

MATERIAL	
Contact	Copper alloy
Plating	Tin

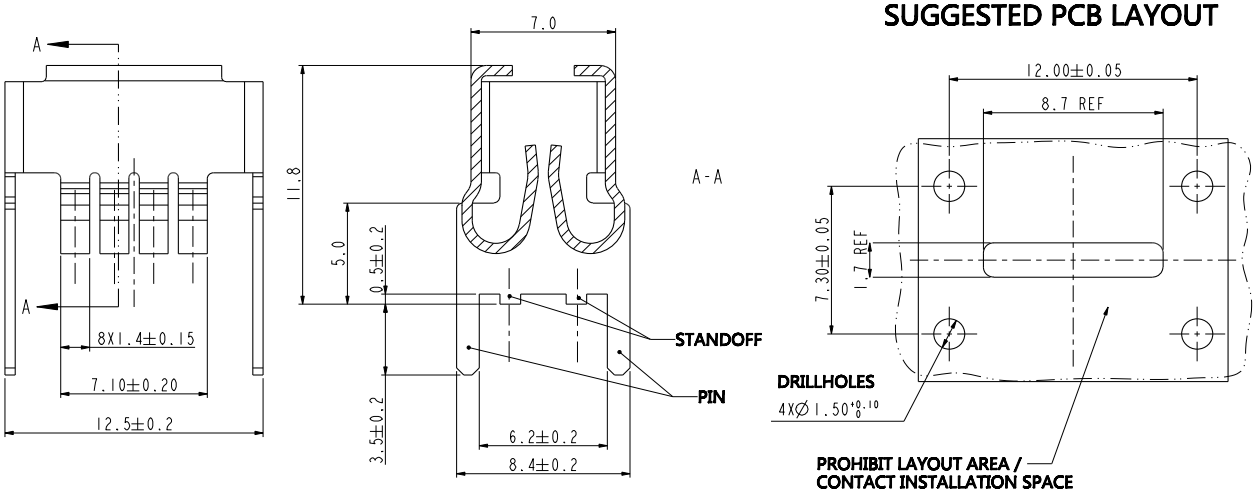

P01BS00118

MECHANICAL	
Durability	> 50 mating cycles
Insertion force	< 35N
Pullout force	> 5N
Matching male contact	8.0 x 0.8mm
Connection type	Soldering

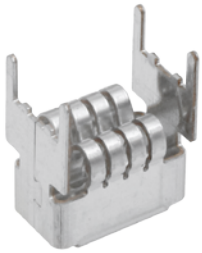

Bulk purchase: **200** units per pack

ELCTRICAL	
Rated current	80A
Contact resistance	≤ 1.0mΩ
Temperature rise	≤ 55K

ENVIRONMENTAL	
Operating temperature	-40°C to 125°C
Ambient temperature	-40°C to 70°C
RoHS	Yes

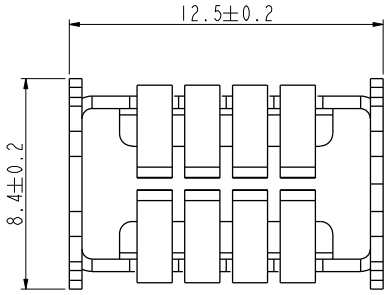

MATERIAL	
Contact	Copper alloy
Plating	Tin

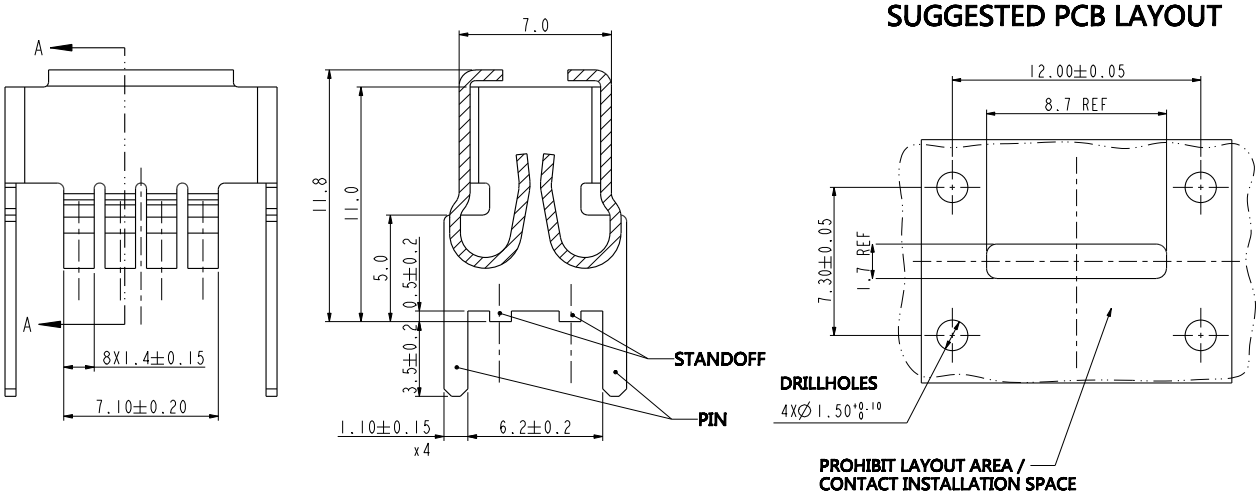

Bulk purchase: **180** units per pack

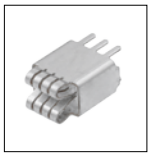

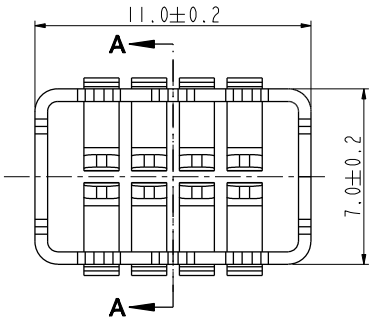

MECHANICAL	
Durability	> 50 mating cycles
Insertion force	< 35N
Pullout force	> 5N
Matching male contact	8.0 x 0.8mm
Connection type	Soldering

ELCTRICAL	
Rated current	80A
Contact resistance	≤ 1.0mΩ
Temperature rise	≤ 55K

ENVIRONMENTAL	
Operating temperature	-40°C to 125°C
Ambient temperature	-40°C to 70°C
RoHS	Yes

MATERIAL	
Contact	Copper alloy
Plating	Tin

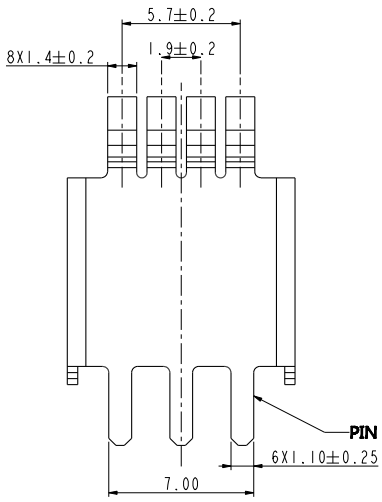

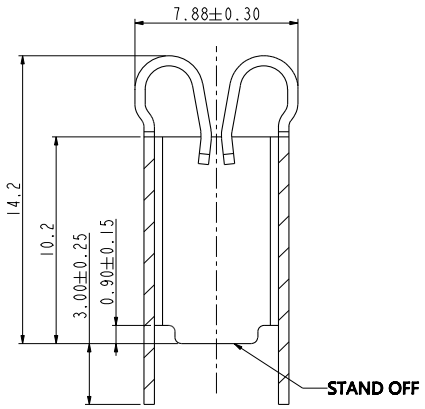

SUGGESTED PCB LAYOUT

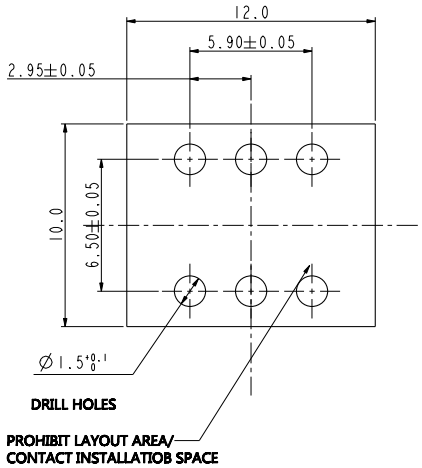

P03BS0011101

MECHANICAL	
Durability	> 50 mating cycles
Insertion force	< 35N
Pullout force	> 5N
Connection type	Crimping

ELCTRICAL	
Rated current	40A (10mm^2)
Temperature rise	≤ 55K

ENVIRONMENTAL	
Operating temperature	-40°C to 125°C
Ambient temperature	-40°C to 70°C
RoHS	Yes

MATERIAL	
Contact	Copper alloy
Plating	Tin

Bulk purchase: **500** units per pack

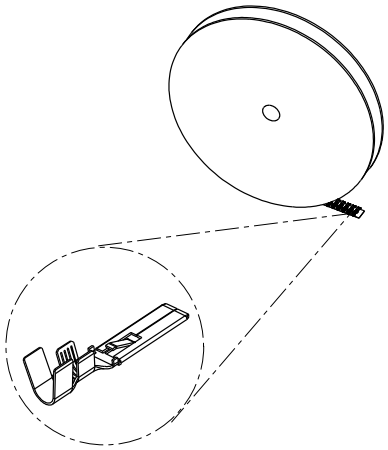

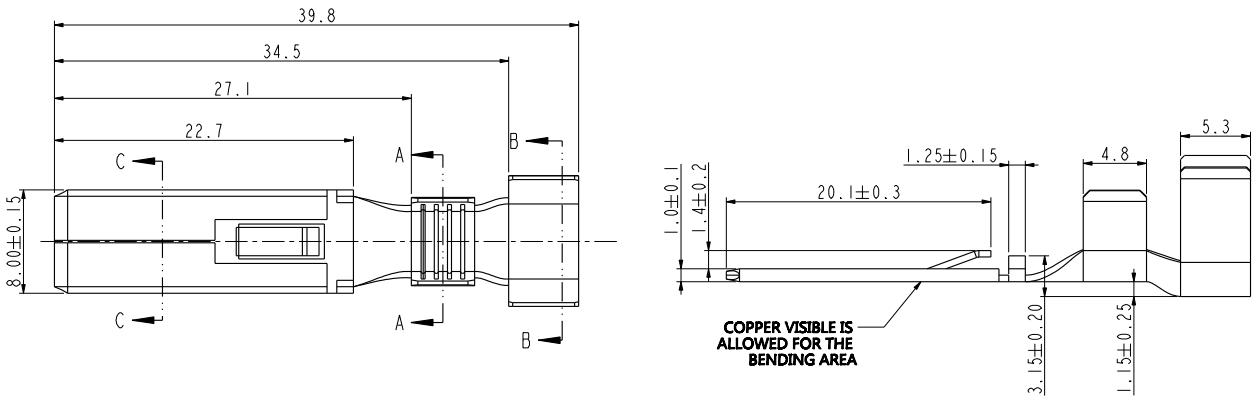

Bulk purchase: **500** units per pack

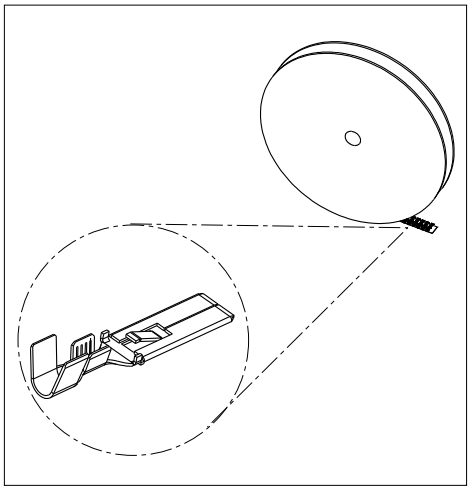

MECHANICAL	
Durability	> 50 mating cycles
Insertion force	< 35N
Pullout force	> 5N
Connection type	Crimping

ELCTRICAL	
Rated current	30A (4mm^2)
Temperature rise	≤ 55K

ENVIRONMENTAL	
Operating temperature	-40°C to 125°C
Ambient temperature	-40°C to 70°C
RoHS	Yes

MATERIAL	
Contact	Copper alloy
Plating	Tin

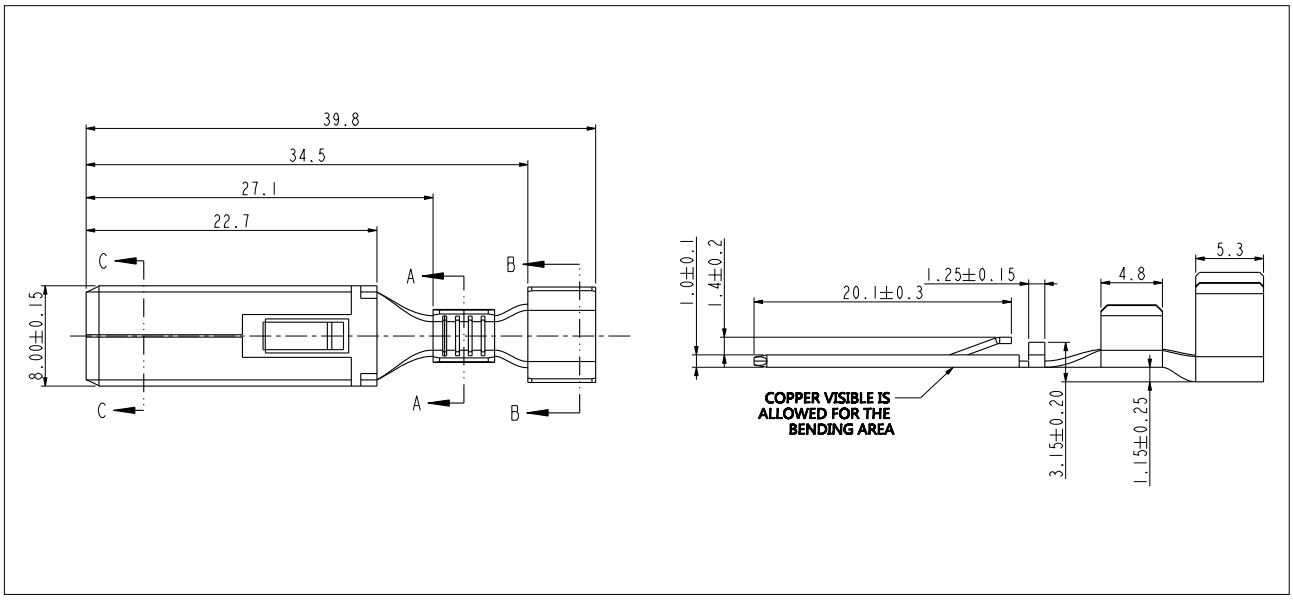

Amphenol PCD Shenzhen

Building 21
1st Liao Keng Industrial Zone
Shi Yan Street, Bao An District Shenzhen 518108
China

Tel.: +86 755-8173-8000
Fax: +86 755-8173-8180
Email: inquiry@amphenolpcd.com.cn

www.amphenolpcd.com.cn

Notes:

Amphenol PCD Shenzhen has made every effort to ensure that the information contained in this catalog is accurate at the time of publication. Specifications or information stated in this publication are subject to change without notice.

Amphenol PCD Shenzhen reserves the right to clarify this catalog.