This is the property of Amphenol Corporation and is delivered on the condition that it is not to be disclosed, reproduced or used, in whole or in part, for manufacture or sale by persons other than Amphenol or others to whom permission is granted to disclose any information in this document.

CUSTOMER DRAWING

SYM	ECN	DESCRIPTION	DATE	APPROVED
A	HK2232	Release to Customer	06/03/02	IP
A1	HK2260	A4: 1.00 was 2.14	7/8/02	IP
A2	HK2280	B3: Added mated position	7/30/02	IP
B	HK2330	3.75+0.2/−0.1 was 3.75±0.2	9/10/02	IP

REVISIONS

AMPHENOL EAST ASIA LIMITED
ENGINEERING DEPARTMENT
DOCUMENT CONTROL
10 SEP 2002
RECEIVED

CONTROLLED DOCUMENT
10 SEP 2002

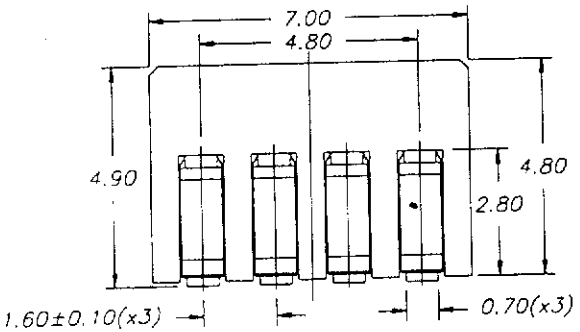

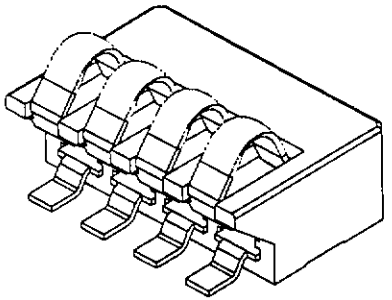

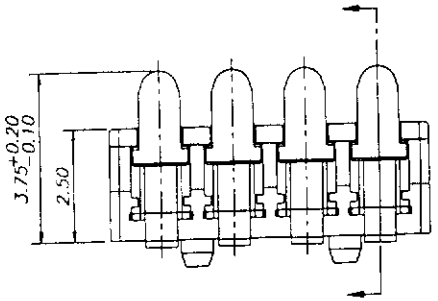

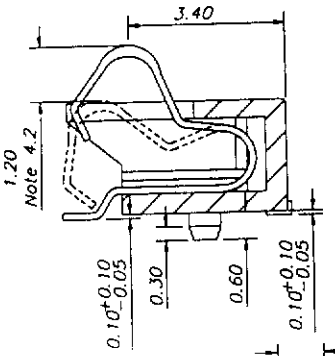

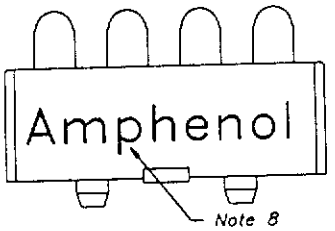

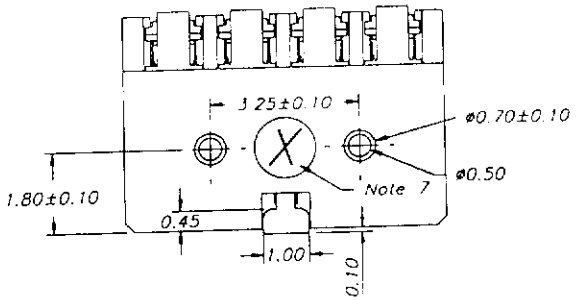

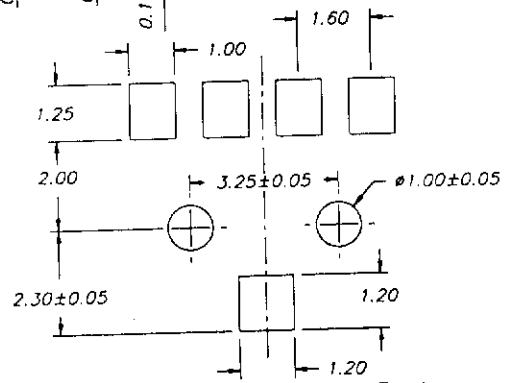

Recommended PCB layout

NOTES:

1. MATERIAL:
   A. PIN:BERYLLIUM COPPER
   B. INSULATOR: 30% GLASS-FILLED THERMOPLASTIC LCP OR EQUIVALENT UL94V-0, BLACK.
2. FINISH: 15 MICROINCH (0.381 MICRON) GOLD PLATE AT MATING AREA, 100-200 MICRONINCH (2.54-5.08 MICRON) AT SOLDER TAIL. 50-100 MICROINCH (1.27-2.54 MICRON) NICKEL UNDERPLATED ALL OVER.
3. ELECTRICAL SPECIFICATIONS:
   VOLTAGE RATING: 250 VAC MIN
   CURRENT RATING: 2.0 A MIN
   DIELECTRIC STRENGTH: 1000 VAC FOR 1 MINUTE MIN
   INSULATION RESISTANCE: 1000 MEG OHM MIN
   CONTACT RESISTANCE: 30 MILL.OHM MAX
   OPERATION TEMPERATURE: -55° TO +125°C
   PRODUCT WITHSTANDING REFLOW SOLDERING 260° FOR 10S
4. MECHANICAL SPECIFICATIONS:
   4.1 DURABILITY: 10,000 CYCLES
   4.2 NORMAL FORCE AT MATED POSITION: 80g MIN.
5. AMPHENOL IDENTIFICATION TO BE MOLDED INTO INSULATOR.
6. PARTS TO BE PACKAGED IN ANTI-STATIC TAPE AND REEL FOR AUTOMATIC PLACEMENT. ALL PACKAGING MATERIALS TO BE APPROVED BY AMPHENOL ENGINEERING.
7. THE CAVITY IS 0.8±.10mm HIGH WITH 0.10±.10mm RECESSED FROM SURFACE.
8. THE Amphenol LOGO IS 0.8±.10mm HIGH WITH 0.10±.10mm RECESSED FROM SURFACE.

ITEM NO	PART OR IDENTIFICATION NO	NOMENCLATURE OR DESCRIPTION	QTY REQ'D

PARTS LIST

UNLESS OTHERWISE SPECIFIED
TOLERANCES

	U.S.	METRIC
.X +/-		0.25
.XX +/-		0.20
.XXX +/-		
FRACTIONS +/-		
ANGLES +/-		0.5°

FOR MATERIALS AND FINISHES SEE NOTES
REMOVE SHARP EDGES
DIMENSIONS
U.S. INCHES
(METRIC) (MM)

APPROVAL		DATE
DRAWN	SO Lus	9/10/02
CHECKED	Michael Ip	9/10/02
CHECKED		9/10/02

DRAWING FILE: \DRAWING\BC\CBC25S04.DWG
ANGLE OF PROJECTION

Amphenol
Amphenol East Asia Limited Manufacturing Operation

TITLE
4 Pins SMT Battery Connector

SIZE	DRAWING NO.	REV.
B	C BC-25S-04	B

SCALE NONE SHEET 1 OF 1